mm [inch]

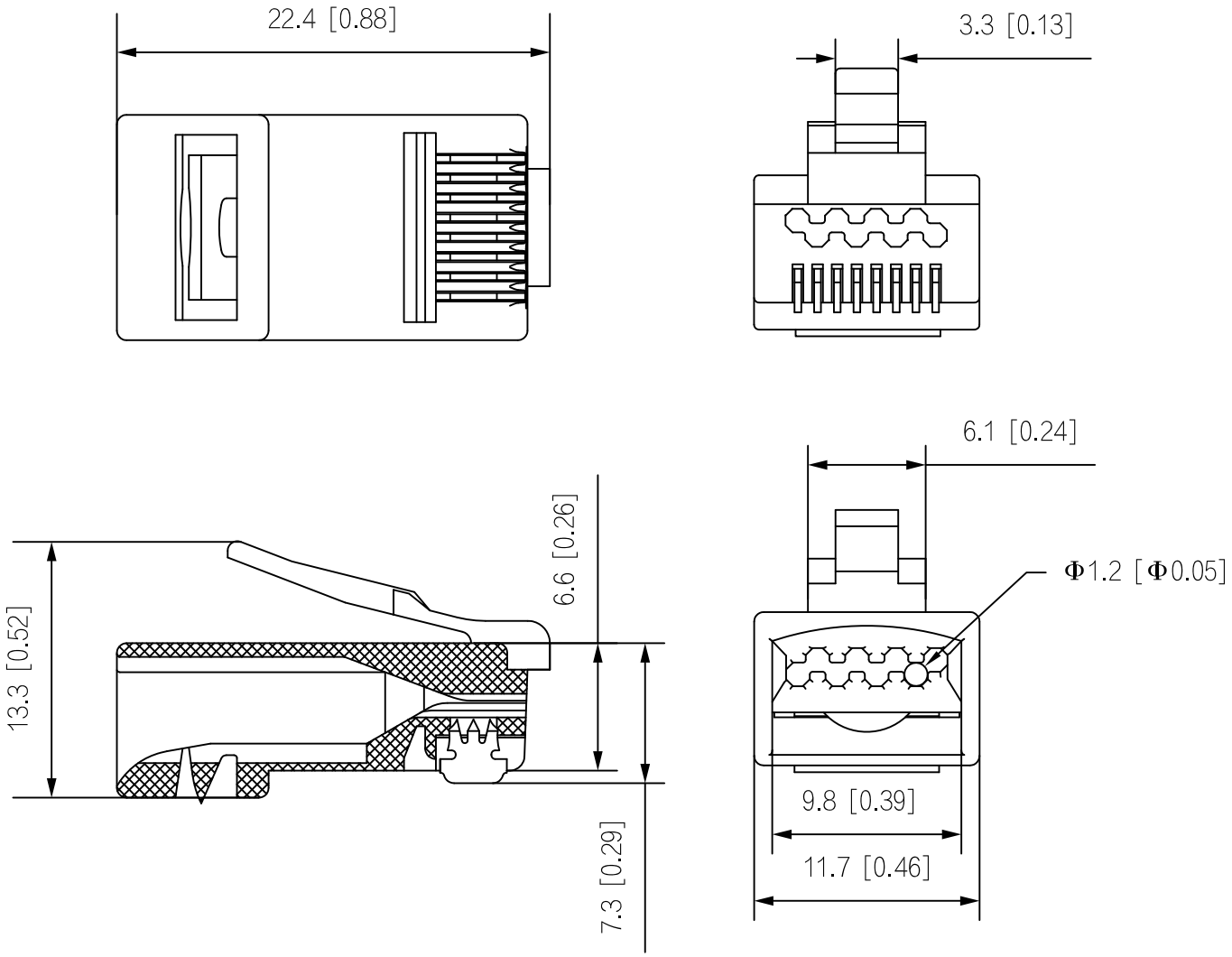
22.4 [0.88]
3.3 [0.13]
6.1 [0.24]
6.6 [0.26]
13.3 [0.52]
Φ1.2 [Φ0.05]
9.8 [0.39]
11.7 [0.46]
7.3 [0.29]