mm [inch]

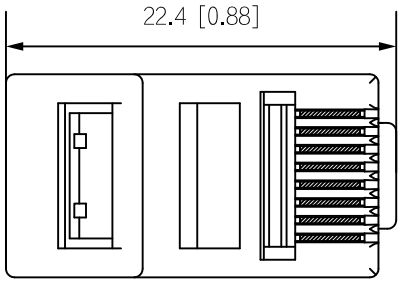
22.4 [0.88]

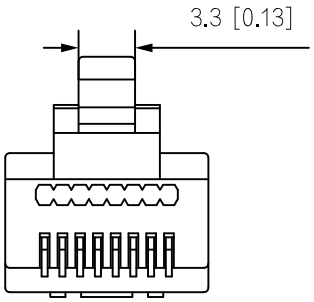
3.3 [0.13]

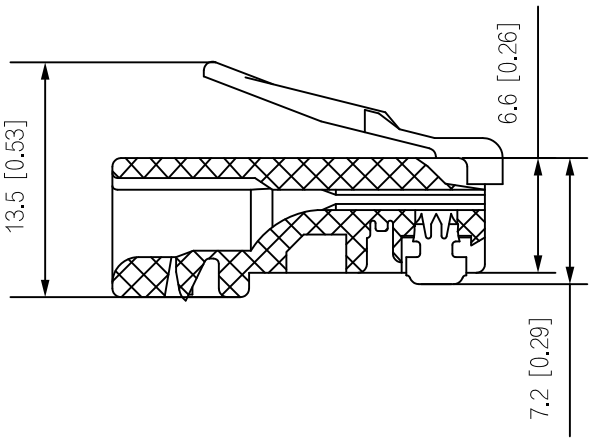
13.5 [0.53]
6.6 [0.26]
7.2 [0.29]

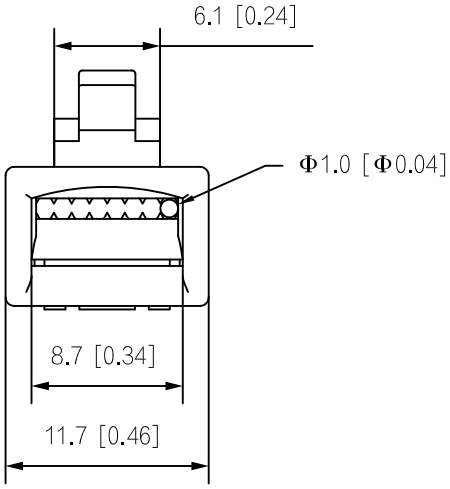
6.1 [0.24]
Φ1.0 [Φ0.04]
8.7 [0.34]
11.7 [0.46]