mm [inch]

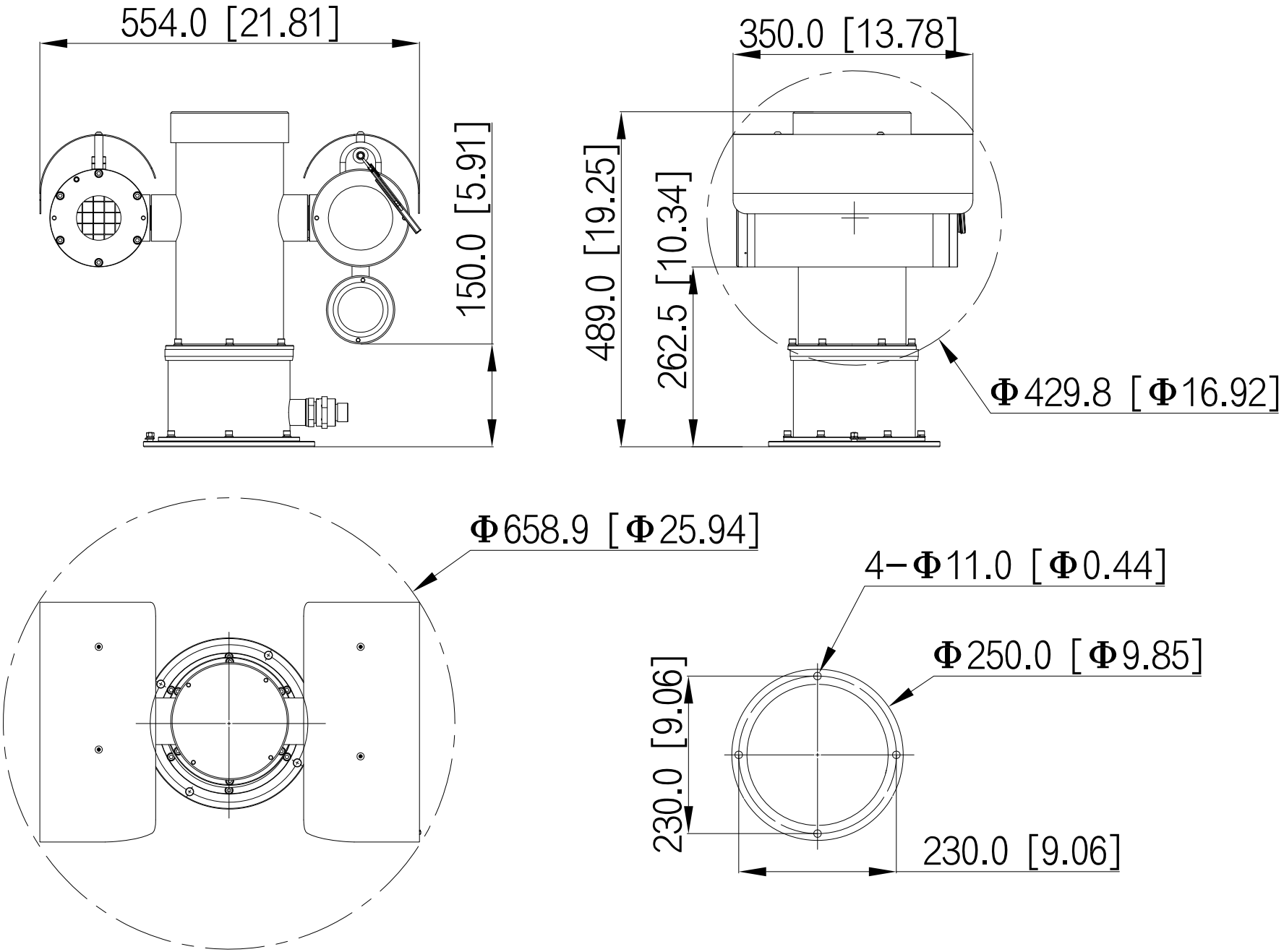
554.0 [21.81]
150.0 [5.91]
350.0 [13.78]
489.0 [19.25]
262.5 [10.34]
Φ429.8 [Φ16.92]
Φ658.9 [Φ25.94]
4−Φ11.0 [Φ0.44]
Φ250.0 [Φ9.85]
230.0 [9.06]
230.0 [9.06]