mm [inch]

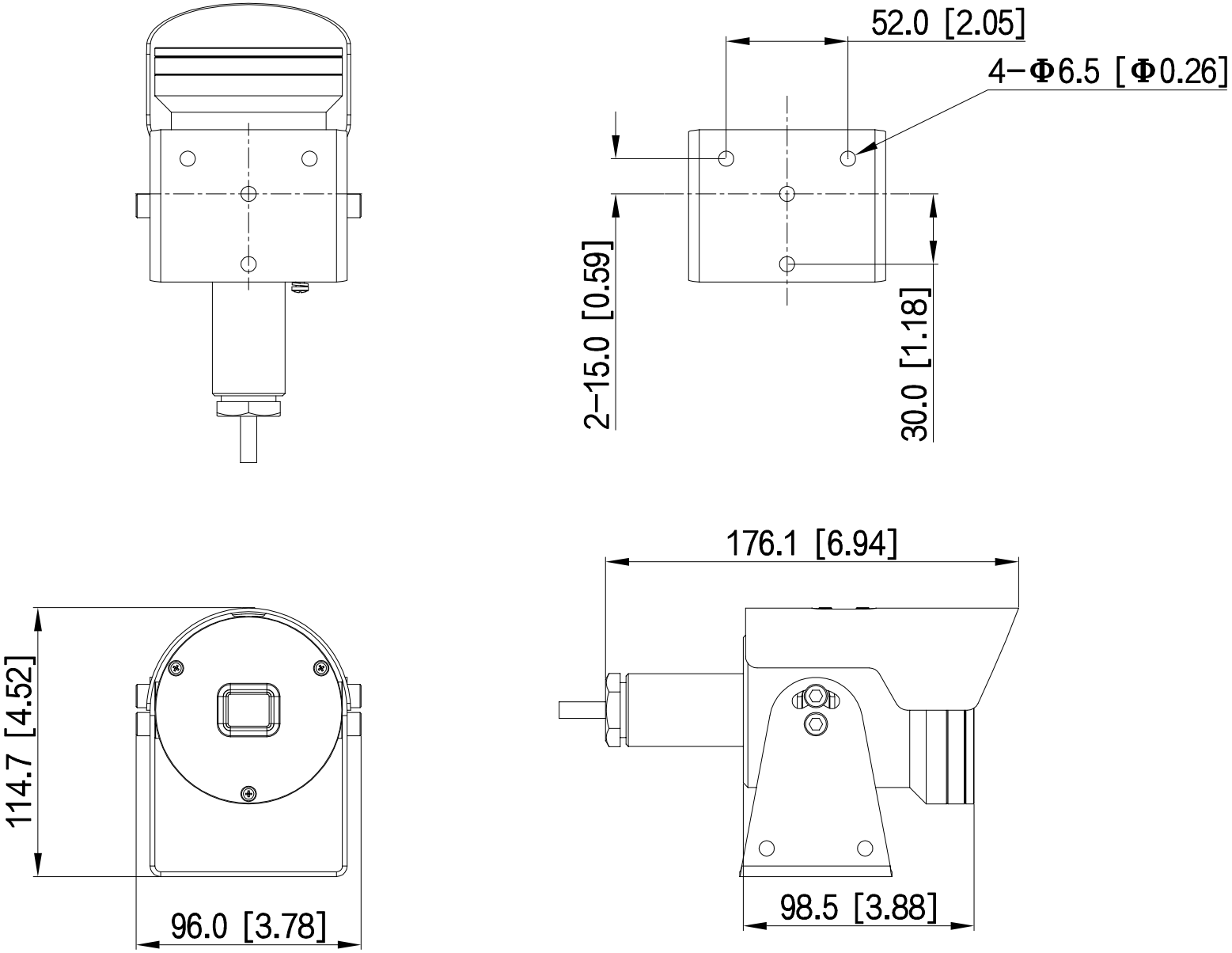
52.0 [2.05]
4−Φ6.5 [Φ0.26]
2−15.0 [0.59]
30.0 [1.18]
176.1 [6.94]
114.7 [4.52]
96.0 [3.78]
98.5 [3.88]