mm [inch]

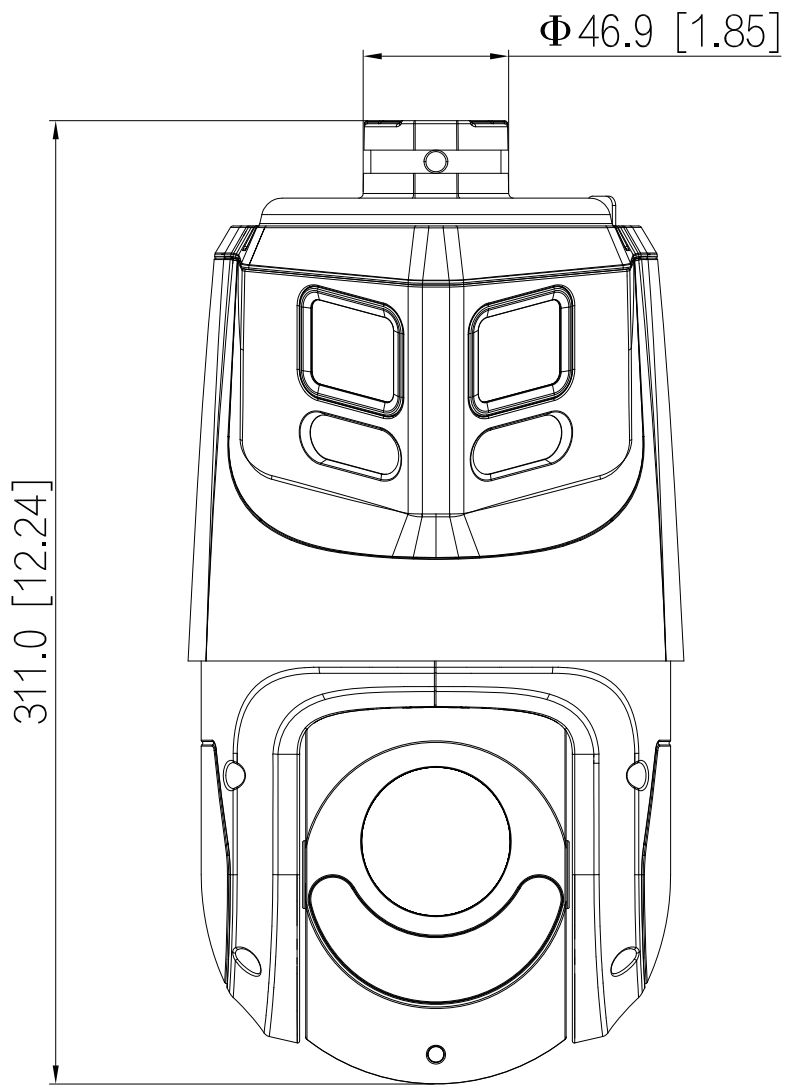
Φ46.9 [1.85]
311.0 [12.24]

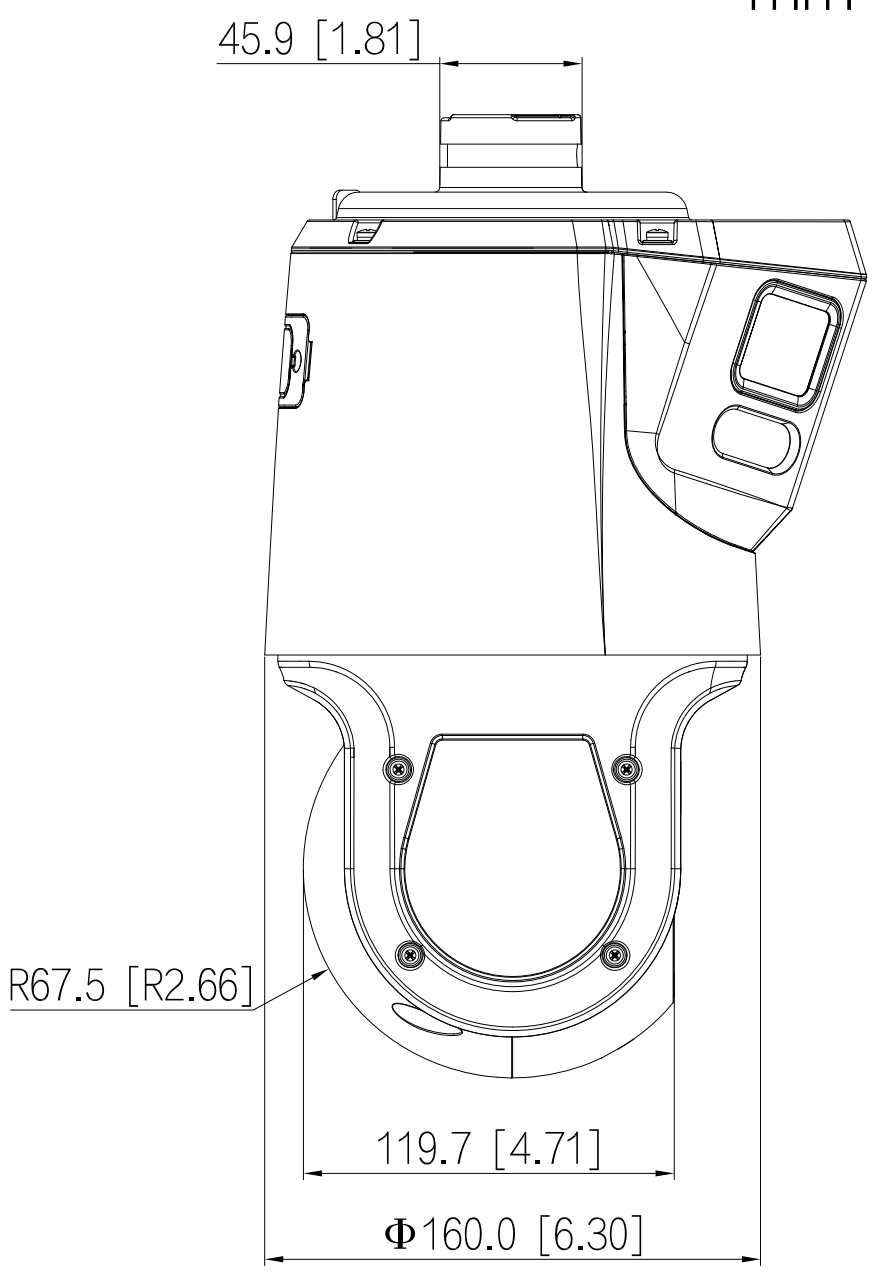
45.9 [1.81]
R67.5 [R2.66]
119.7 [4.71]
Φ160.0 [6.30]

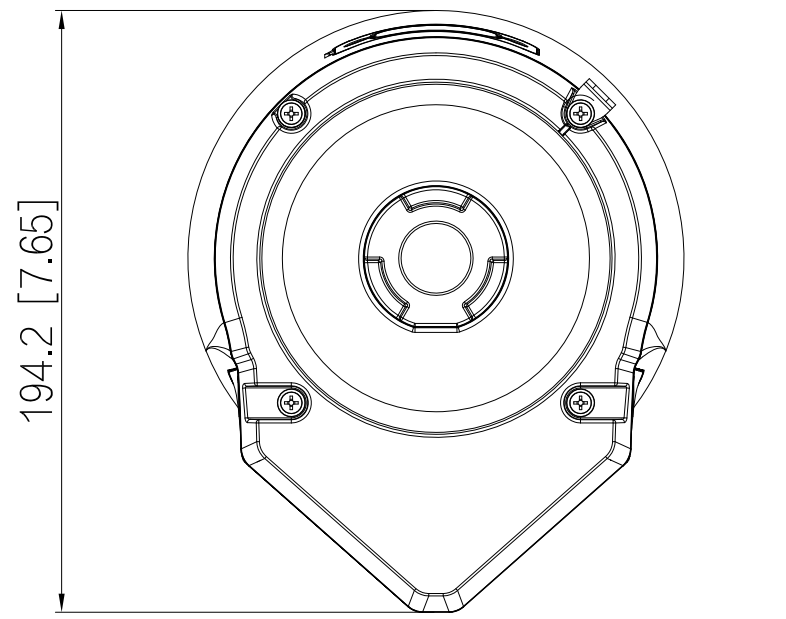
194.2 [7.65]