mm [inch]

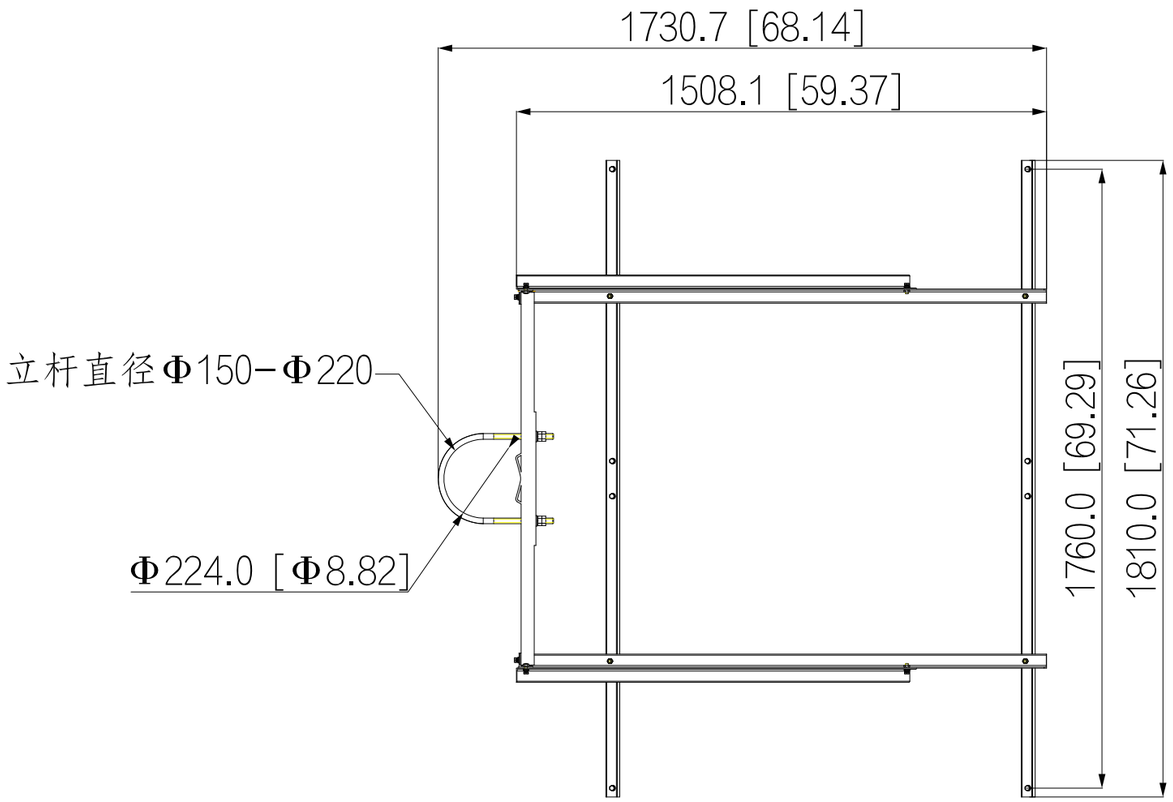
1730.7 [68.14]
1508.1 [59.37]
立杆直径Φ150-Φ220
Φ224.0 [Φ8.82]
1760.0 [69.29]
1810.0 [71.26]

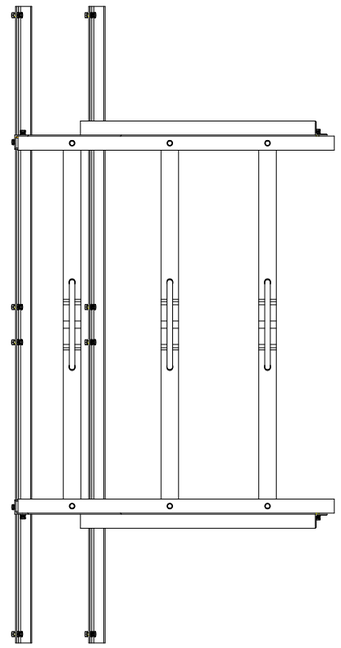

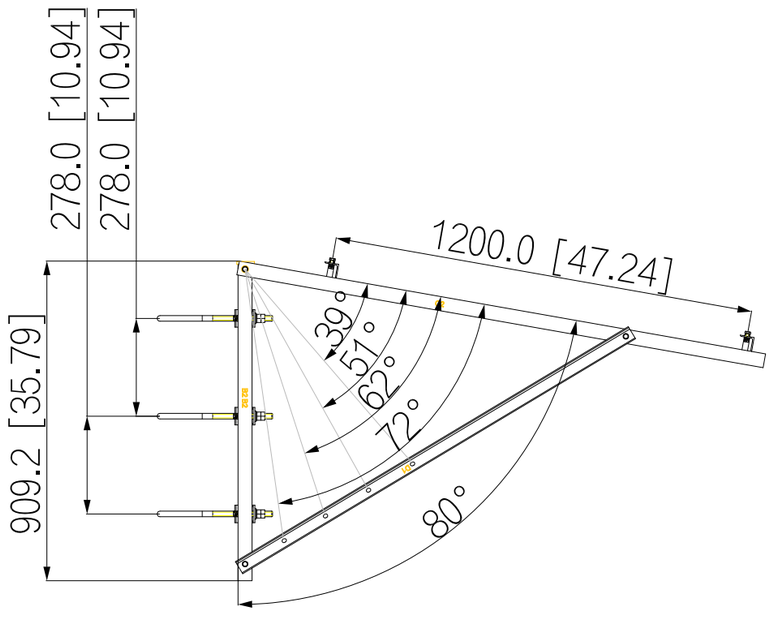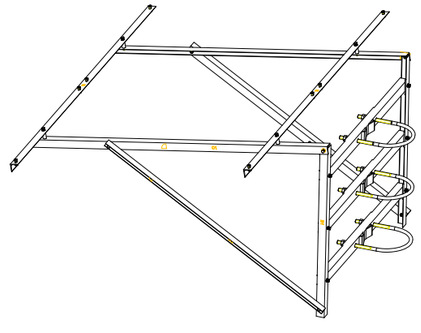
278.0 [10.94]
278.0 [10.94]
909.2 [35.79]
1200.0 [47.24]
39°
51°
62°
72°
80°