mm [inch]

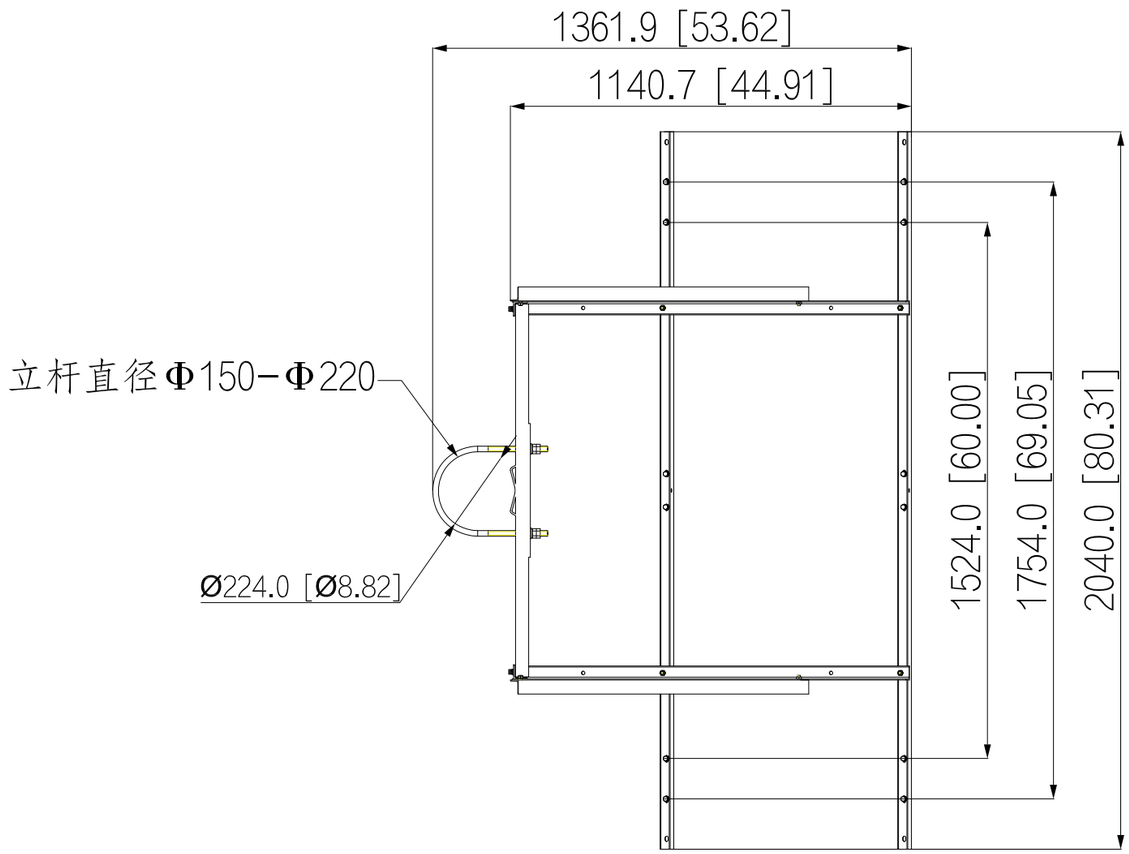
1361.9 [53.62]
1140.7 [44.91]
立杆直径Φ150−Φ220
Ø224.0 [Ø8.82]
1524.0 [60.00]
1754.0 [69.05]
2040.0 [80.31]

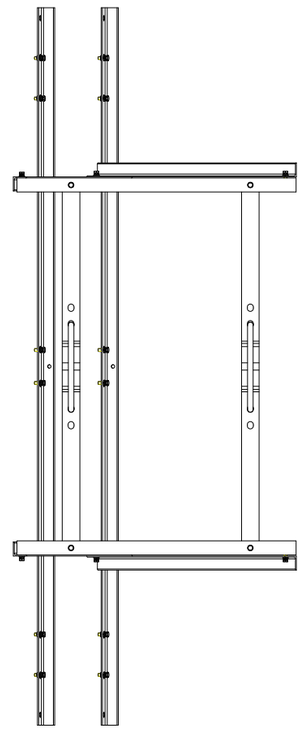

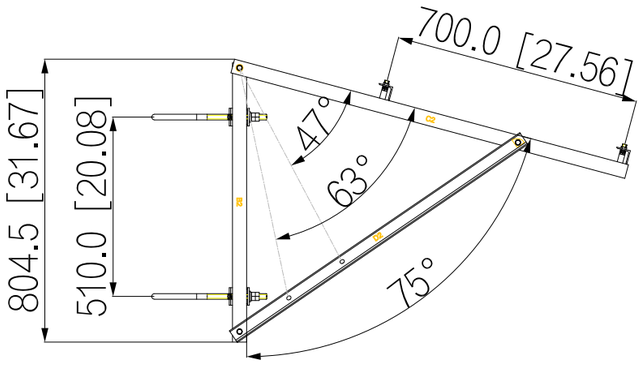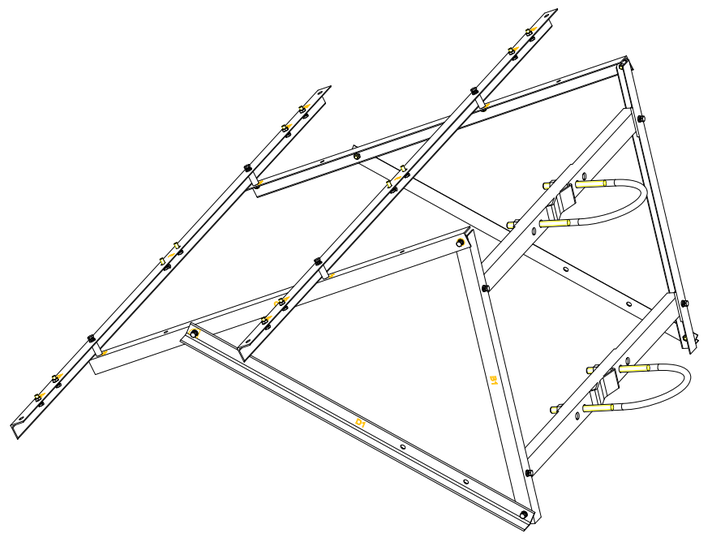
700.0 [27.56]
804.5 [31.67]
510.0 [20.08]
47°
63°
75°