mm [inch]

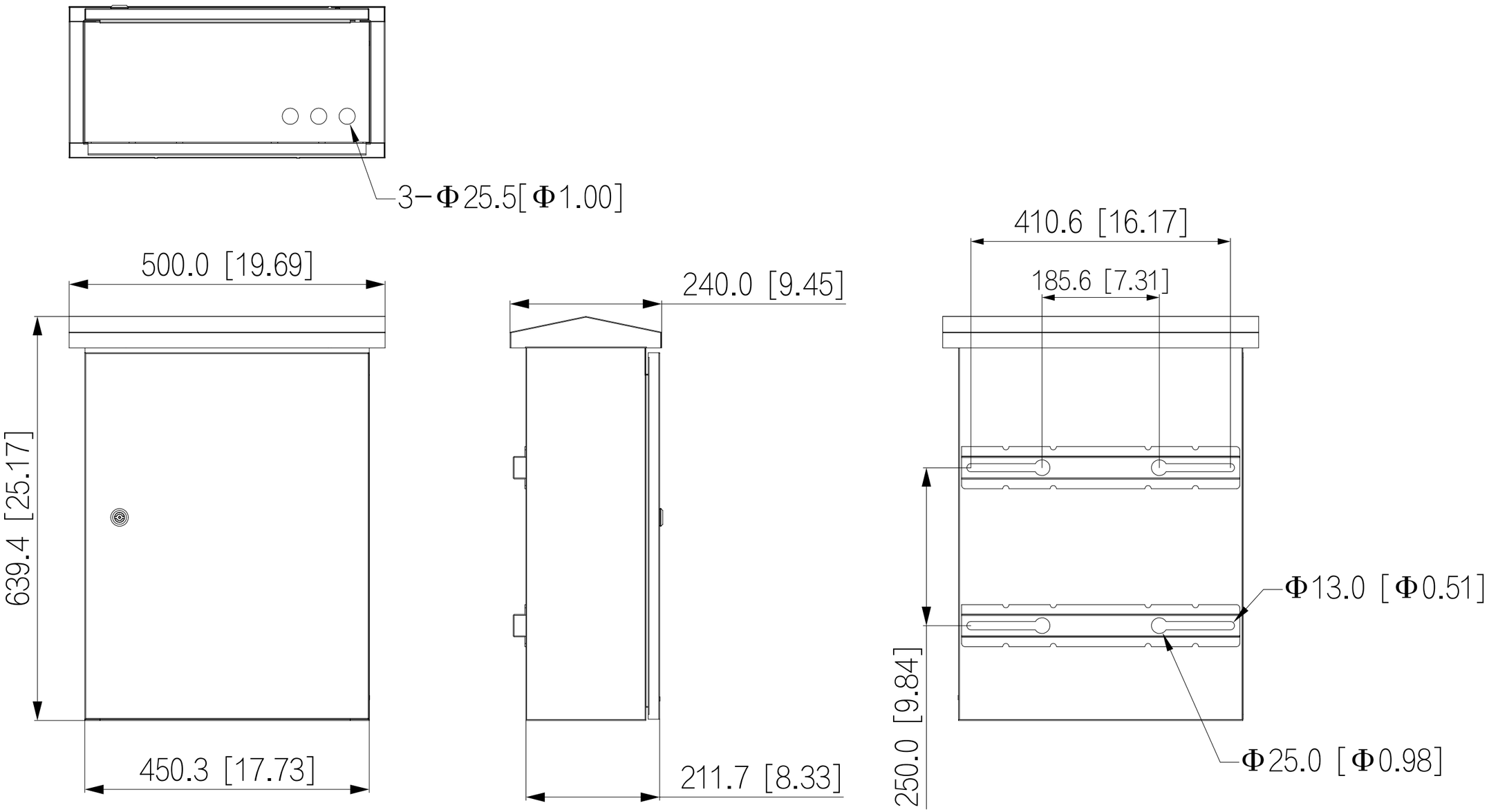
3−Φ25.5[Φ1.00]
500.0 [19.69]
639.4 [25.17]
450.3 [17.73]
240.0 [9.45]
211.7 [8.33]
410.6 [16.17]
185.6 [7.31]
Φ13.0 [Φ0.51]
250.0 [9.84]
Φ25.0 [Φ0.98]