mm [inch]

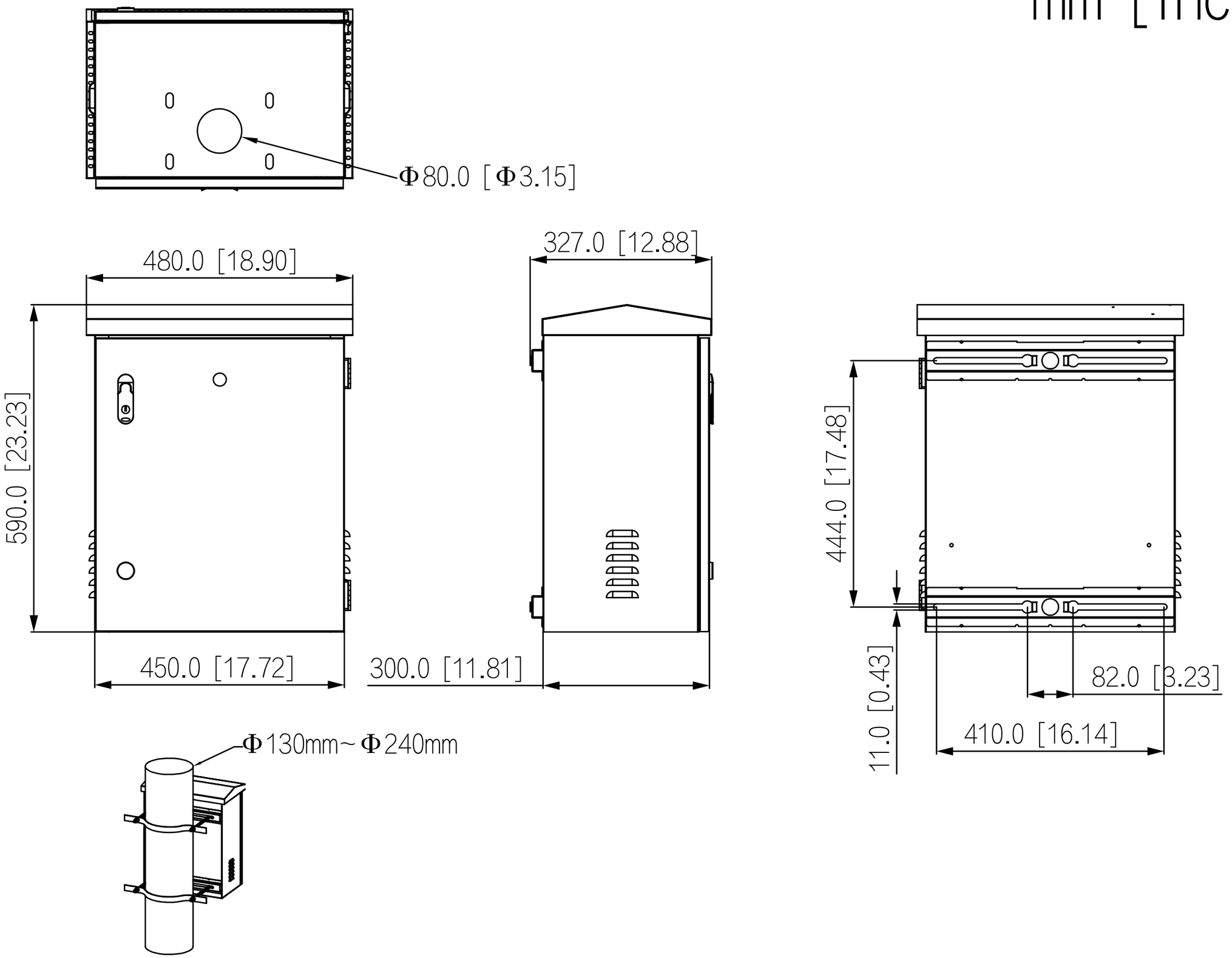
Φ80.0 [Φ3.15]
480.0 [18.90]
590.0 [23.23]
450.0 [17.72]
327.0 [12.88]
300.0 [11.81]
444.0 [17.48]
11.0 [0.43]
82.0 [3.23]
410.0 [16.14]
Φ130mm~Φ240mm