mm [inch]

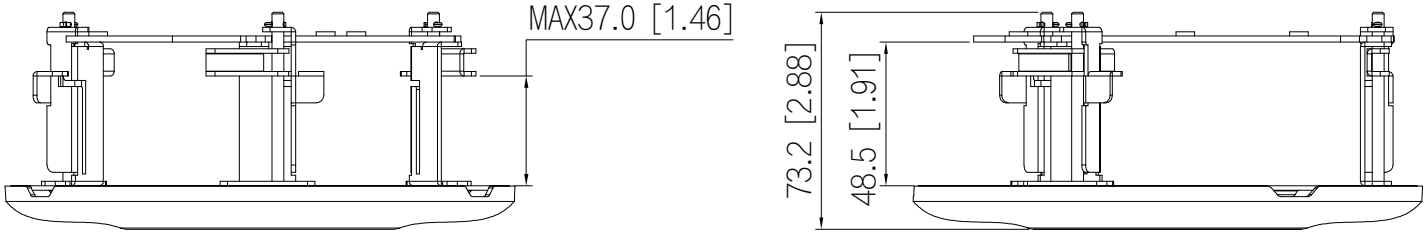
MAX37.0 [1.46]
73.2 [2.88]
48.5 [1.91]

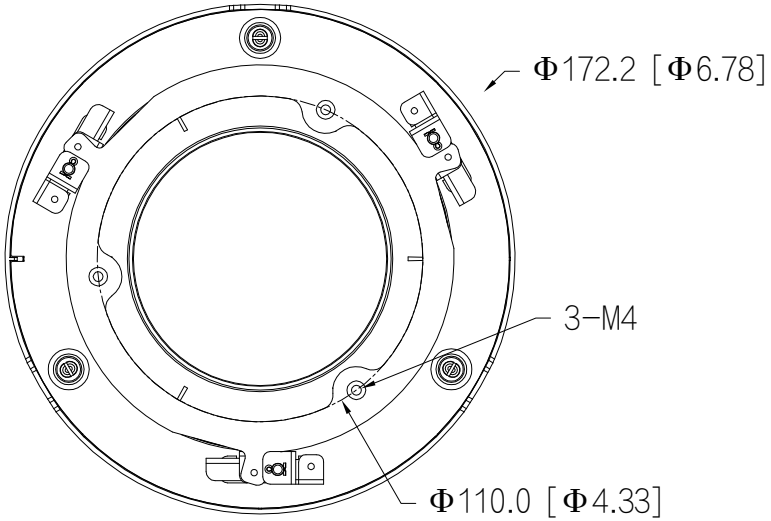
Φ172.2 [Φ6.78]
3-M4
Φ110.0 [Φ4.33]

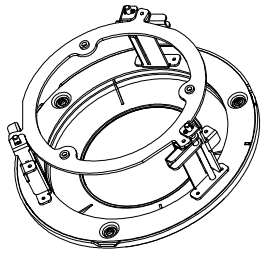

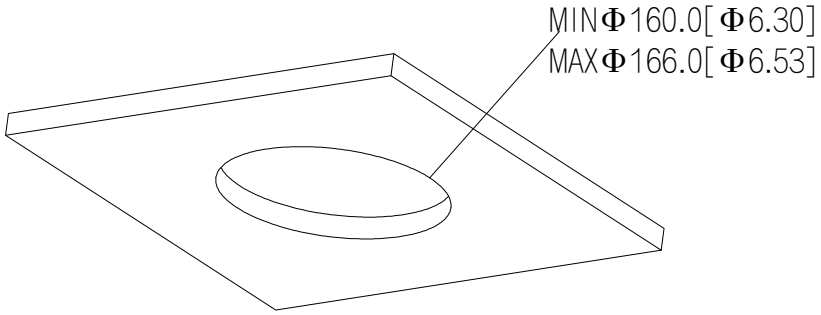
MINΦ160.0[Φ6.30]
MAXΦ166.0[Φ6.53]