mm [inch]

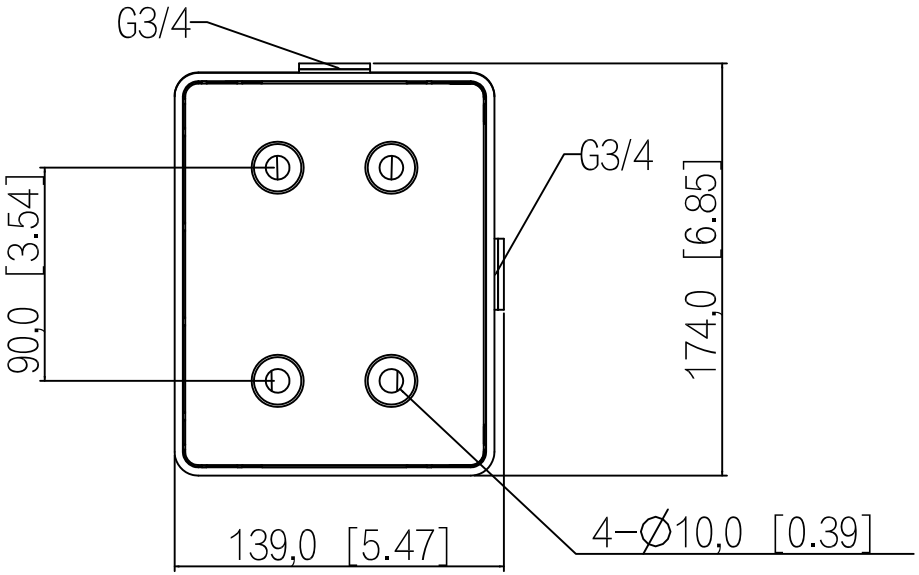
G3/4
G3/4
90,0 [3.54]
174,0 [6.85]
139,0 [5.47]
4−∅10,0 [0.39]

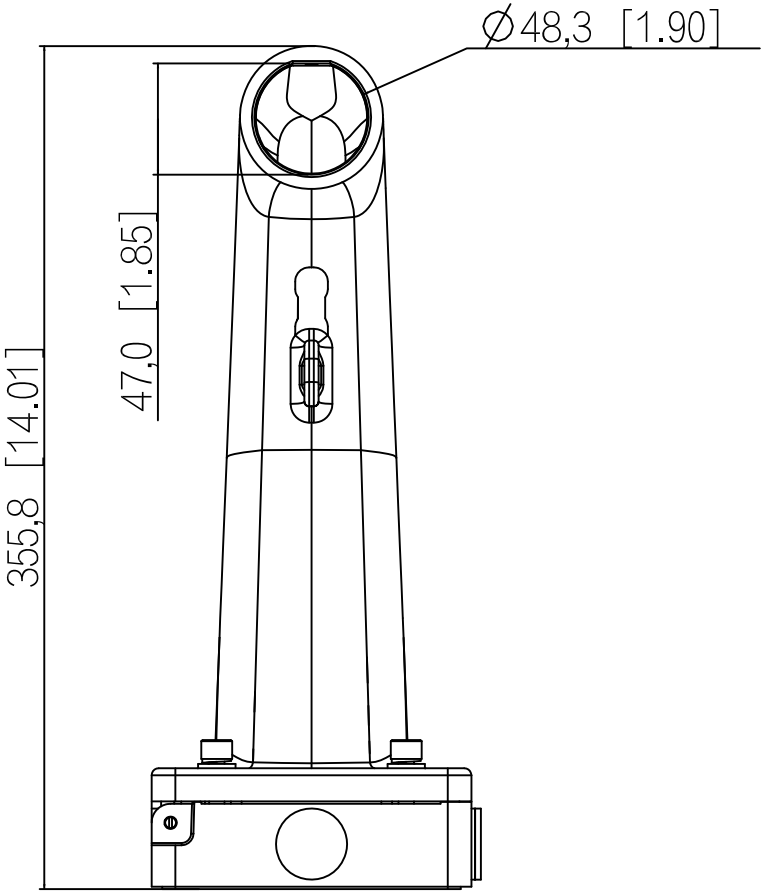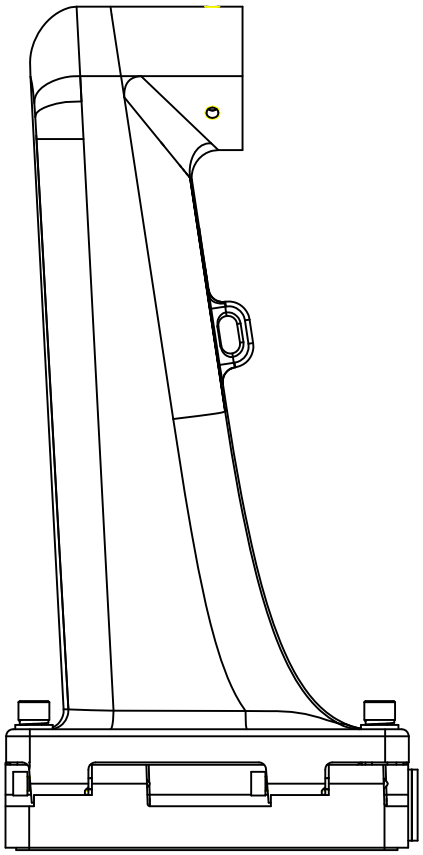
∅48,3 [1.90]
47,0 [1.85]
355,8 [14.01]