mm [inch]

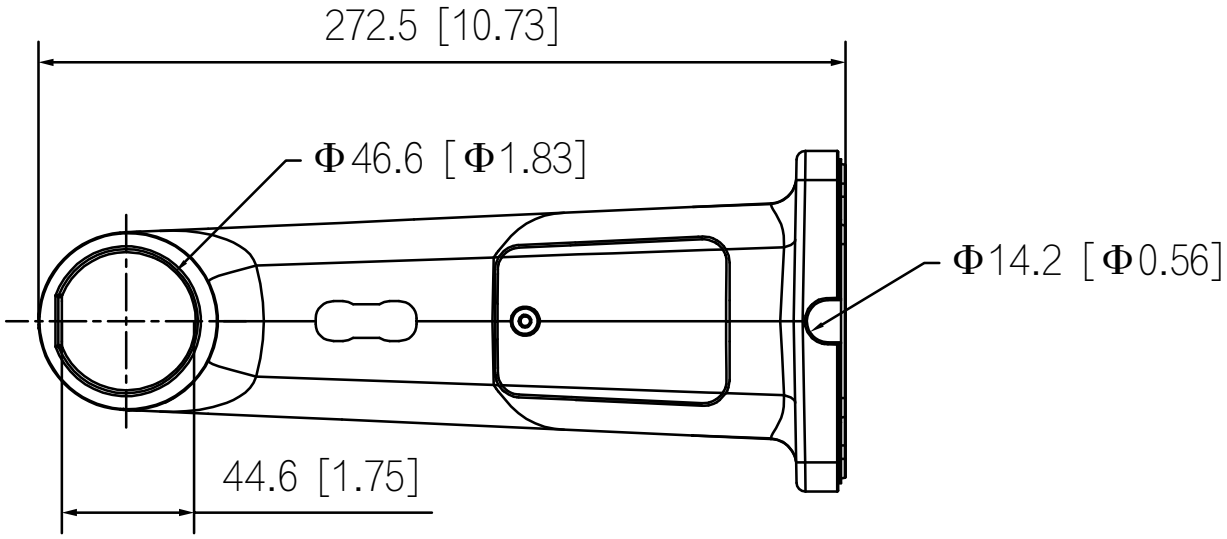
272.5 [10.73]
Φ46.6 [Φ1.83]
Φ14.2 [Φ0.56]
44.6 [1.75]

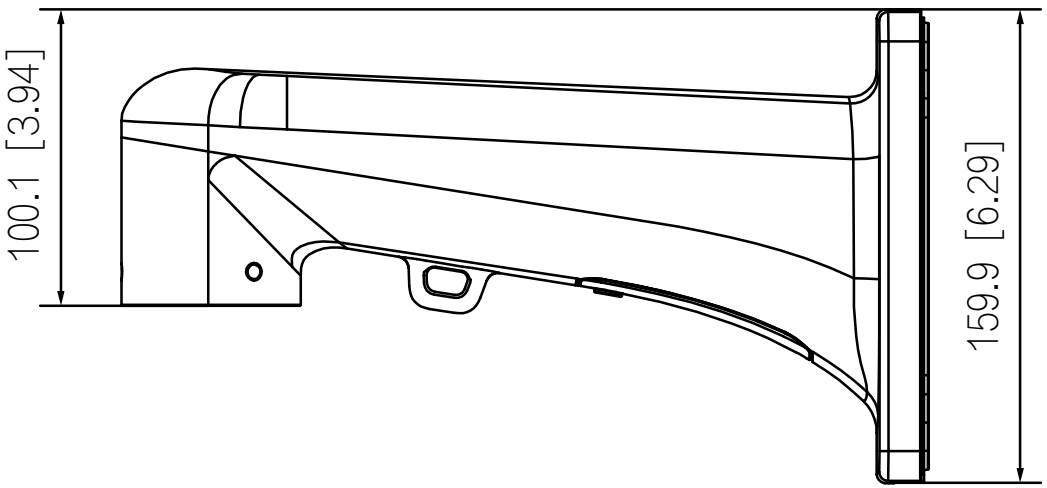
100.1 [3.94]
159.9 [6.29]

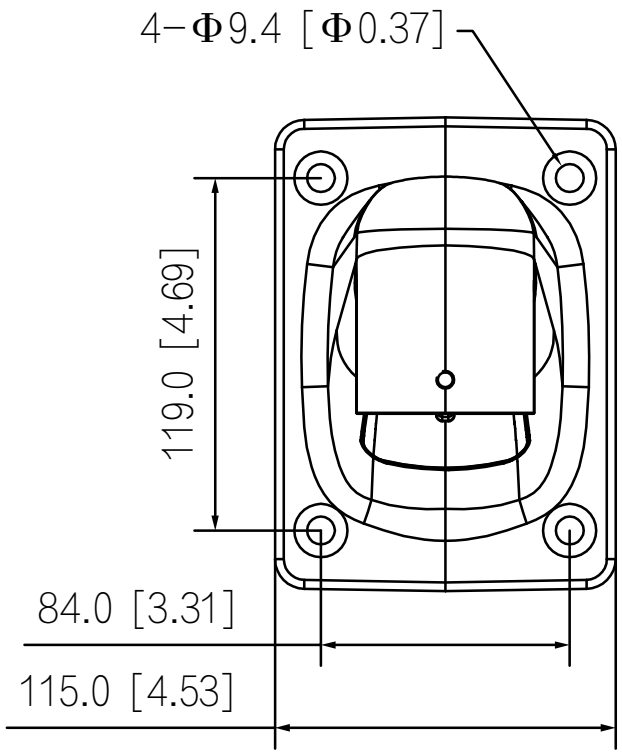
4−Φ9.4 [Φ0.37]
119.0 [4.69]
84.0 [3.31]
115.0 [4.53]