mm [inch]

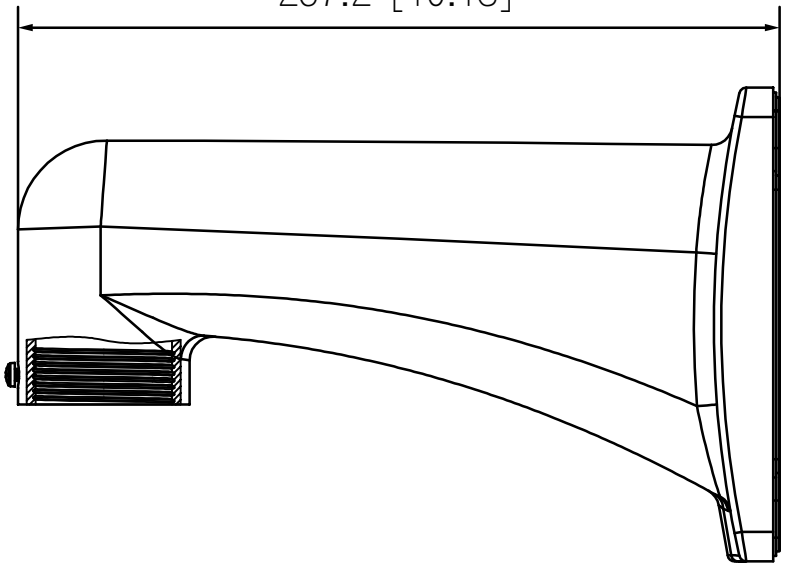
257.2 [10.13]

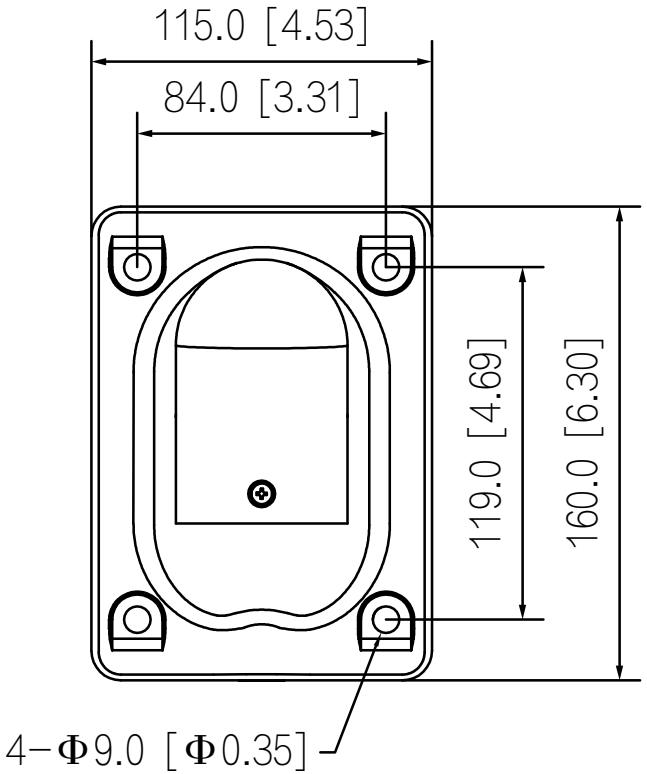
115.0 [4.53]
84.0 [3.31]
119.0 [4.69]
160.0 [6.30]
4−Φ9.0 [Φ0.35]

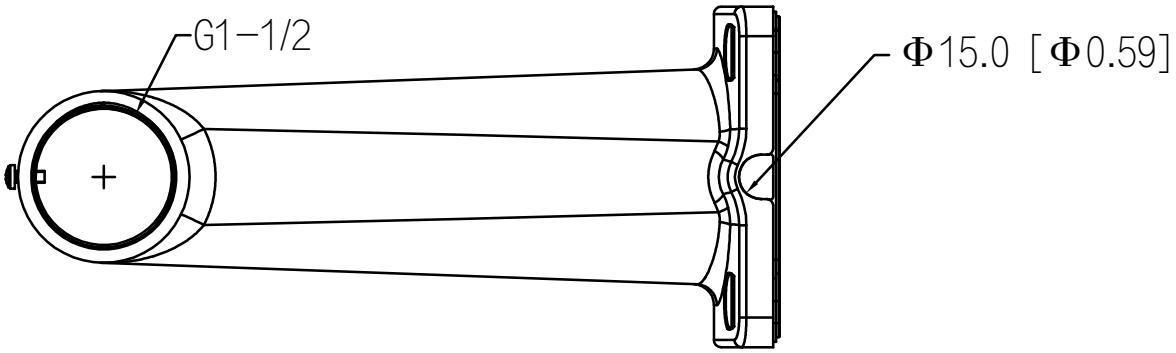
G1−1/2
Φ15.0 [Φ0.59]