mm [inch]

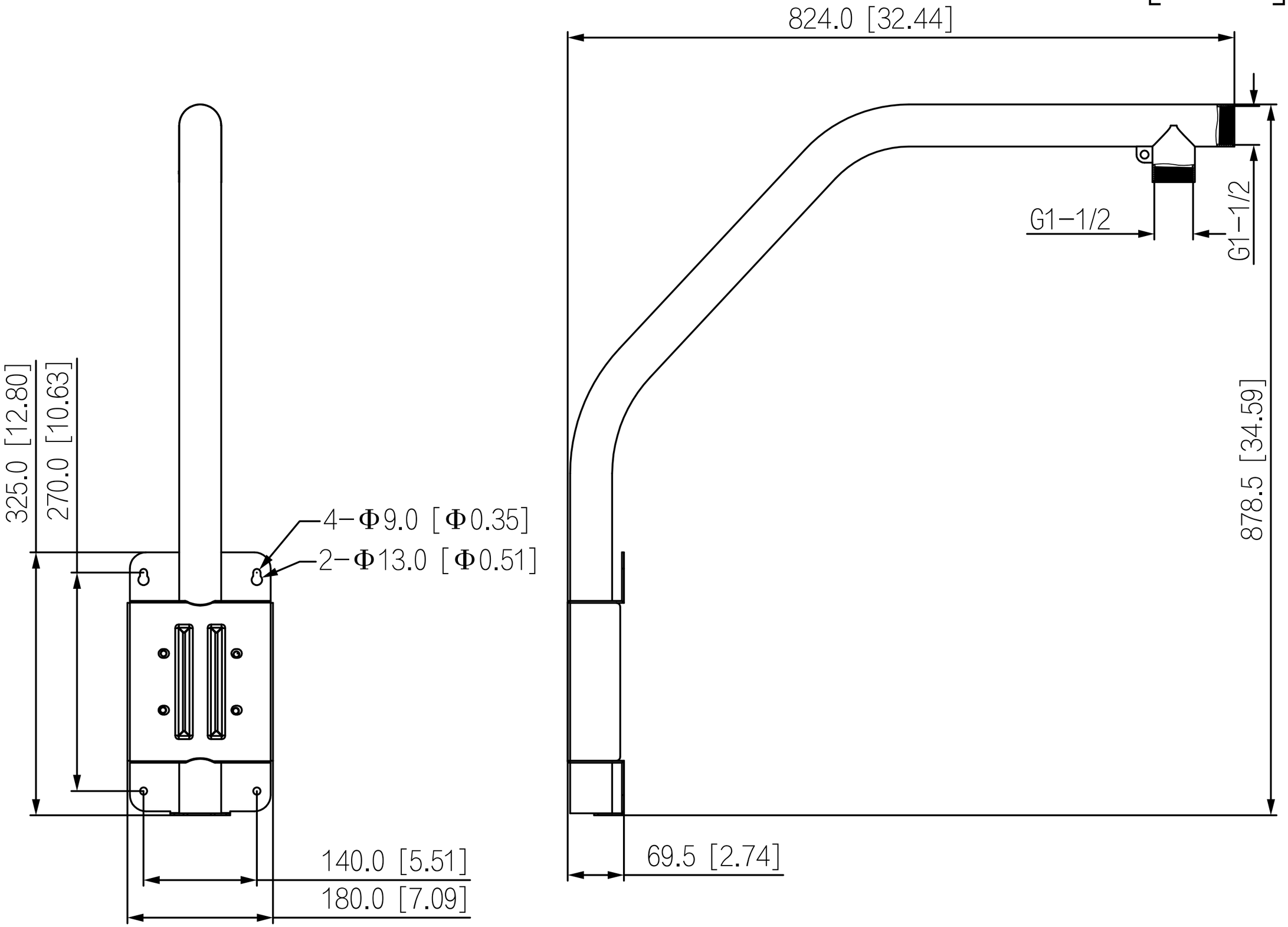
824.0 [32.44]
G1−1/2
G1−1/2
878.5 [34.59]
325.0 [12.80]
270.0 [10.63]
4−Φ9.0 [Φ0.35]
2−Φ13.0 [Φ0.51]
140.0 [5.51]
180.0 [7.09]
69.5 [2.74]