mm [inch]

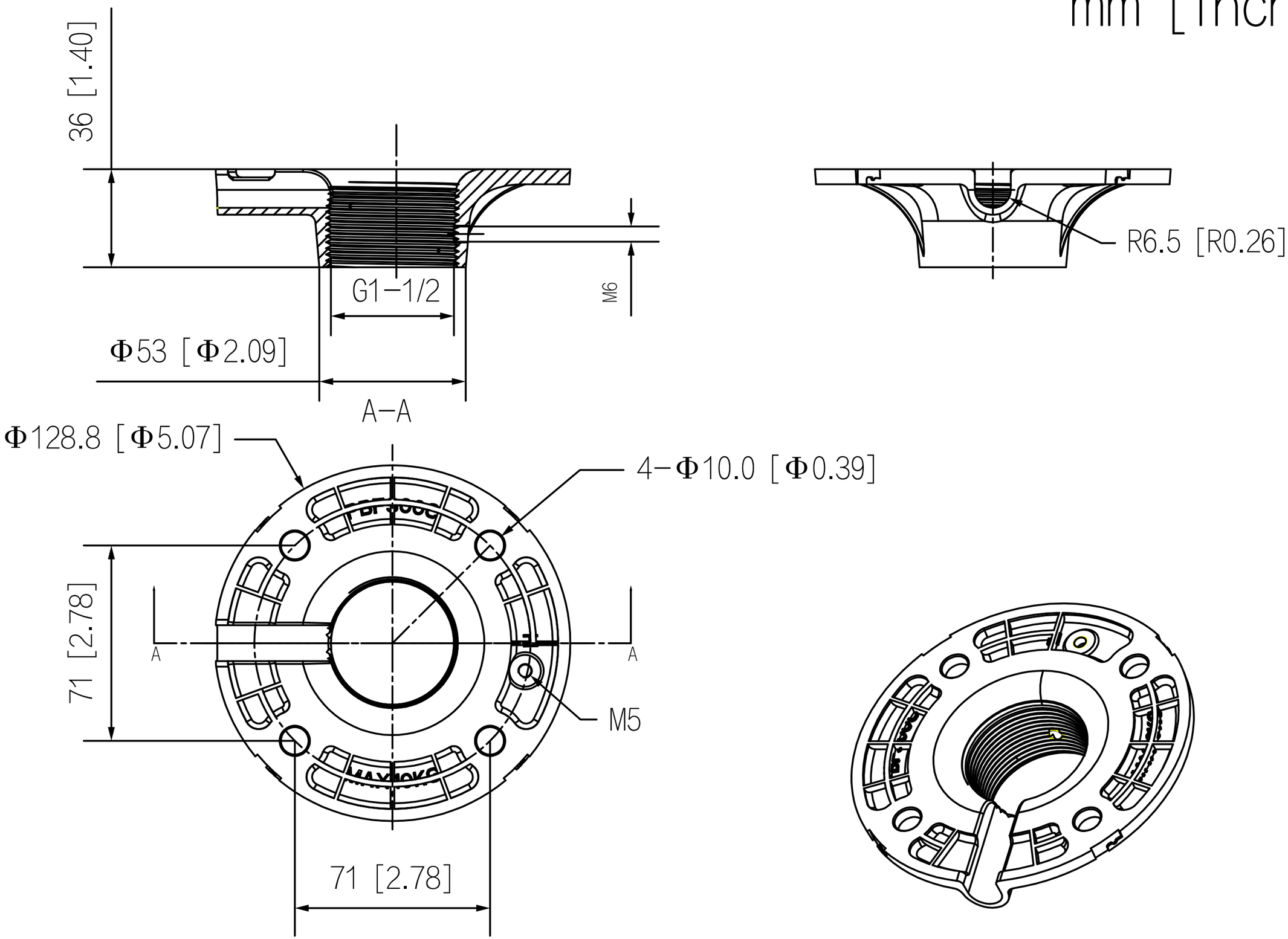
36 [1.40]
G1−1/2
M6
Φ53 [Φ2.09]
A−A
R6.5 [R0.26]
Φ128.8 [Φ5.07]
4−Φ10.0 [Φ0.39]
71 [2.78]
A
A
M5
71 [2.78]