mm [inch]

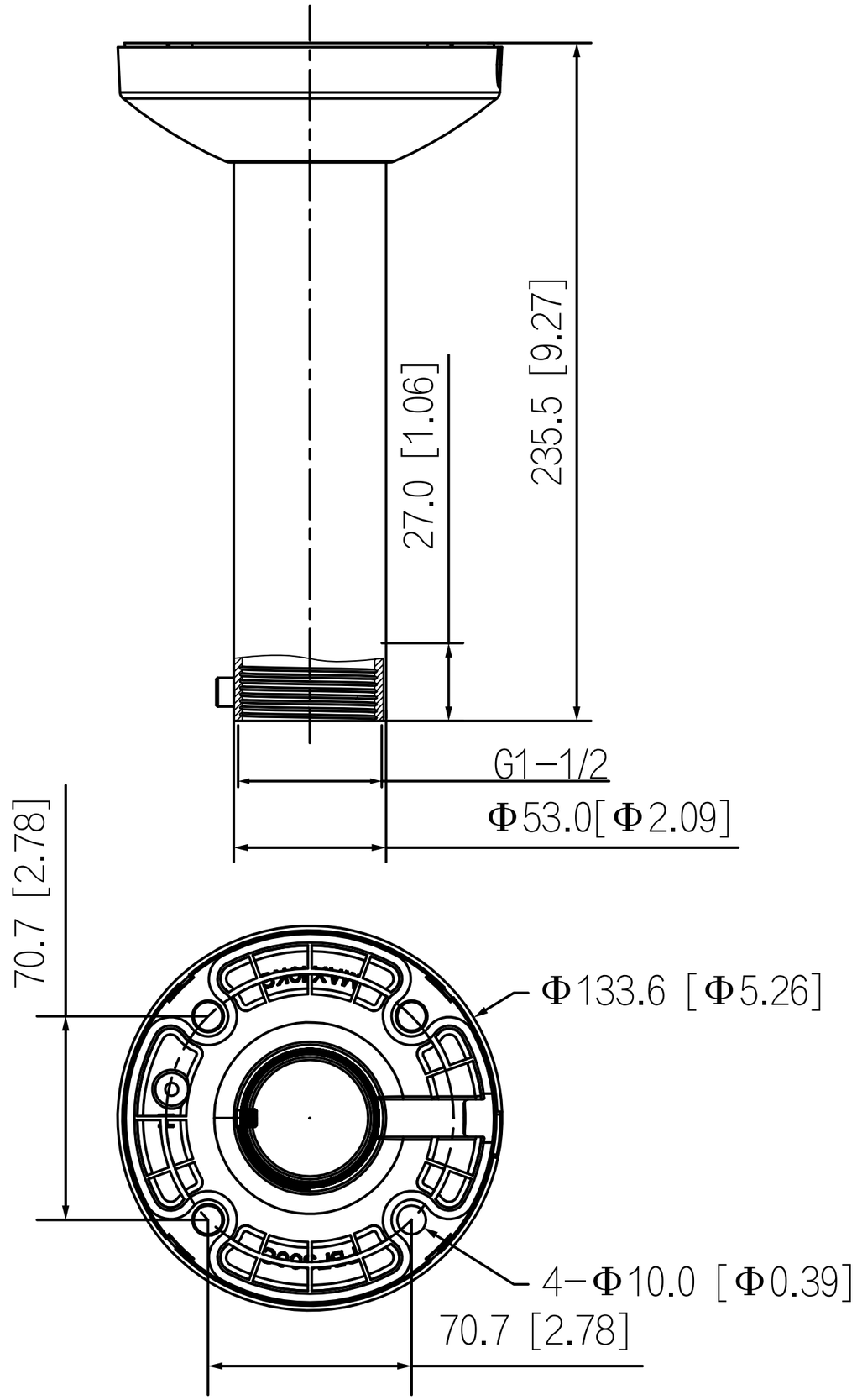
235.5 [9.27]
27.0 [1.06]
G1−1/2
Φ53.0[Φ2.09]
70.7 [2.78]
Φ133.6 [Φ5.26]
4−Φ10.0 [Φ0.39]
70.7 [2.78]