mm [inch]

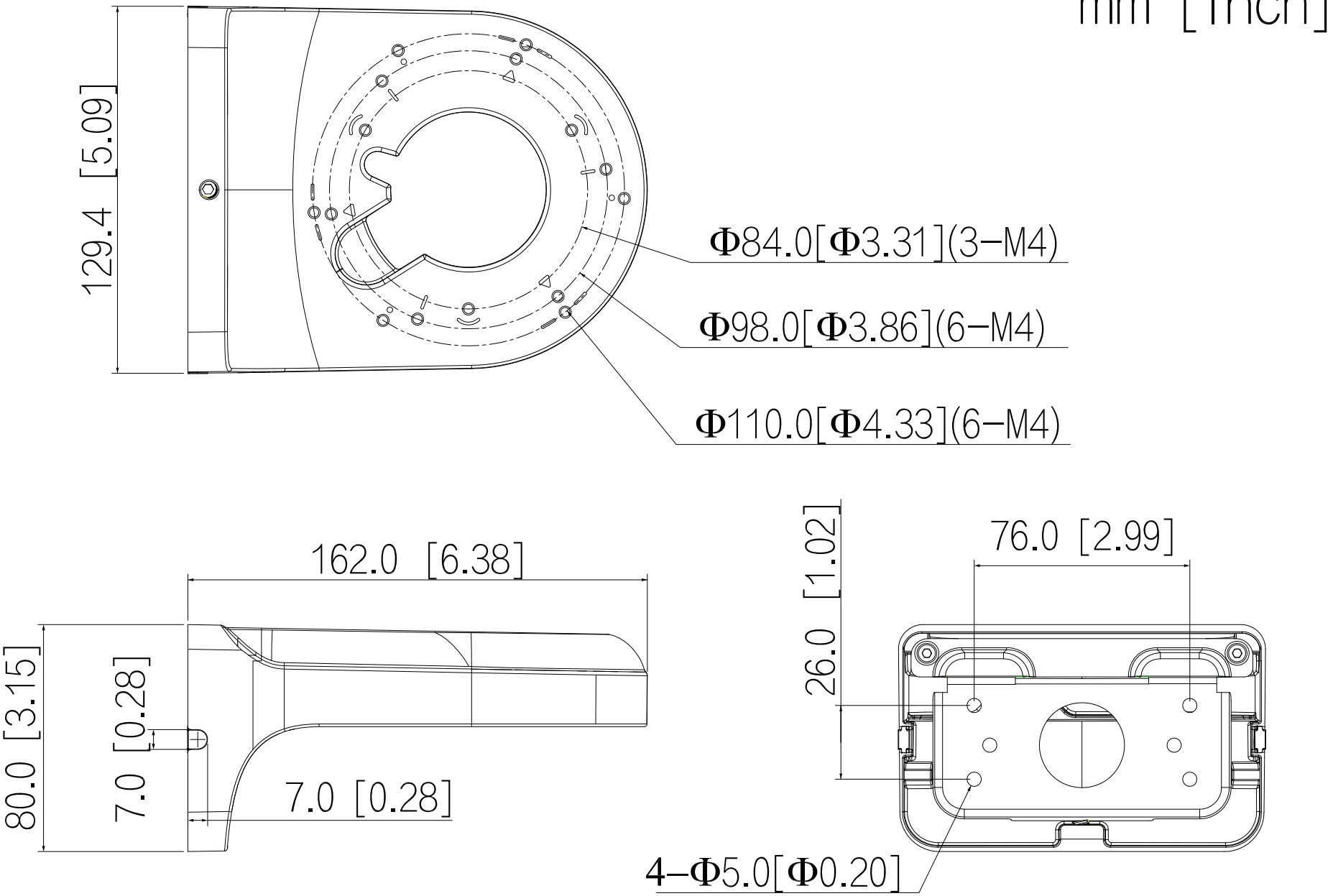
129.4 [5.09]
Φ84.0[Φ3.31](3−M4)
Φ98.0[Φ3.86](6−M4)
Φ110.0[Φ4.33](6−M4)
162.0 [6.38]
80.0 [3.15]
7.0 [0.28]
7.0 [0.28]
26.0 [1.02]
76.0 [2.99]
4−Φ5.0[Φ0.20]