mm [inch]

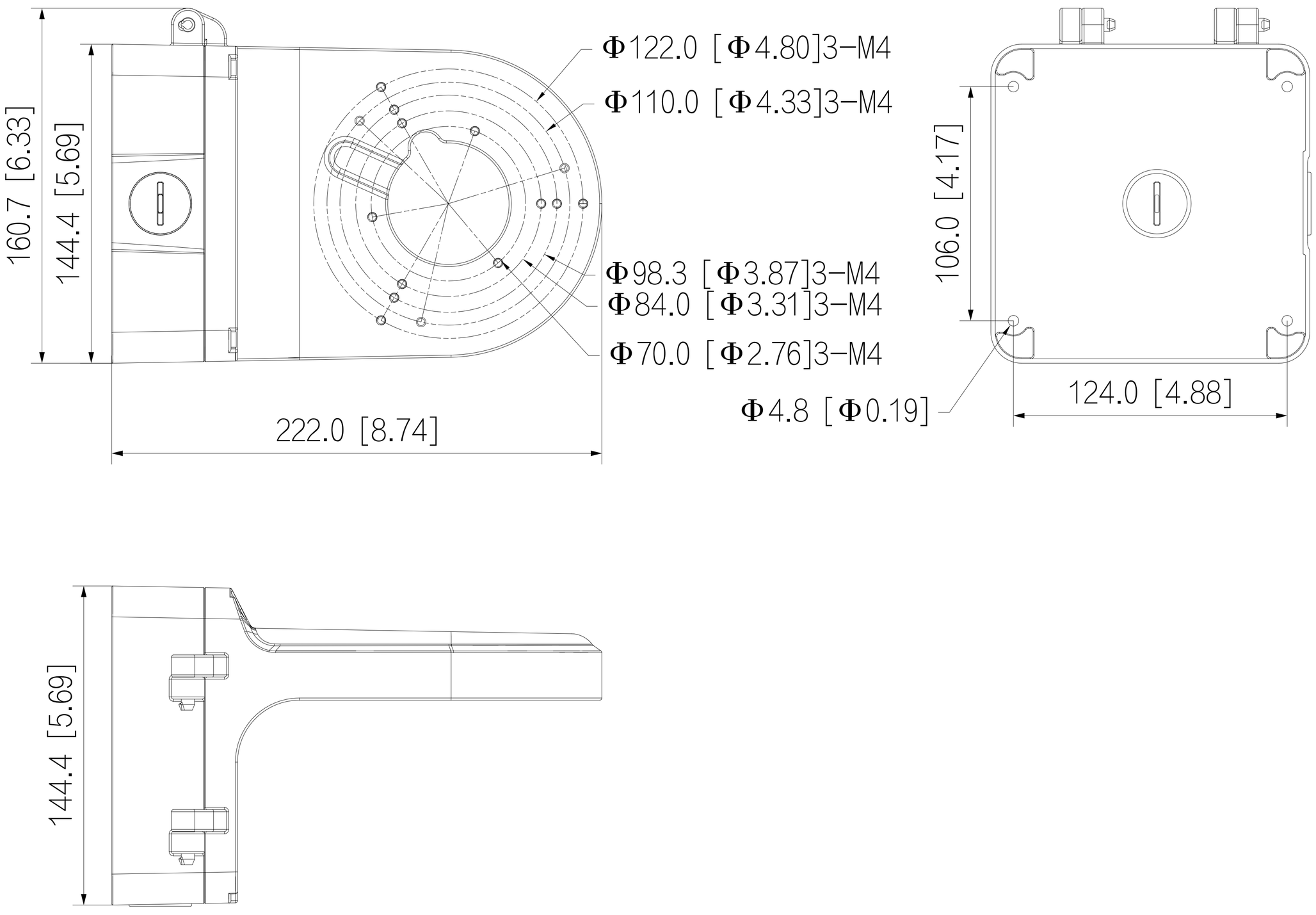
Φ122.0 [Φ4.80]3-M4
Φ110.0 [Φ4.33]3-M4
Φ98.3 [Φ3.87]3-M4
Φ84.0 [Φ3.31]3-M4
Φ70.0 [Φ2.76]3-M4
160.7 [6.33]
144.4 [5.69]
222.0 [8.74]
106.0 [4.17]
124.0 [4.88]
Φ4.8 [Φ0.19]
144.4 [5.69]