mm [inch]

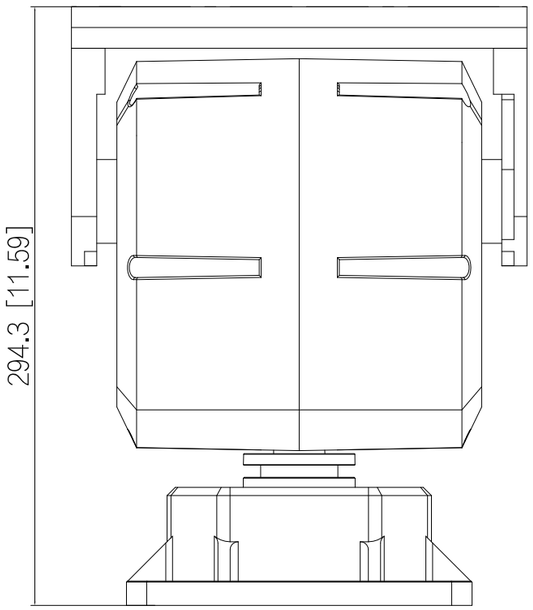
294.3 [11.59]

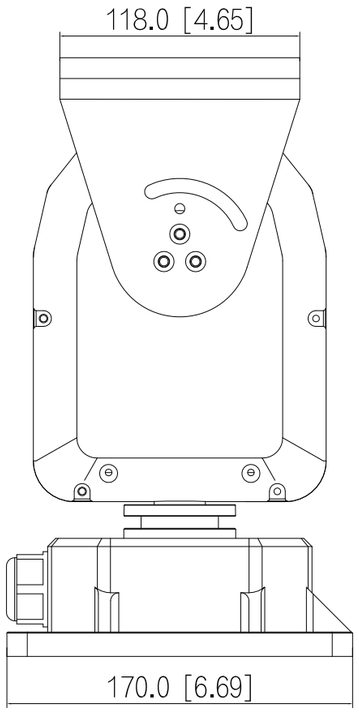
118.0 [4.65]
170.0 [6.69]

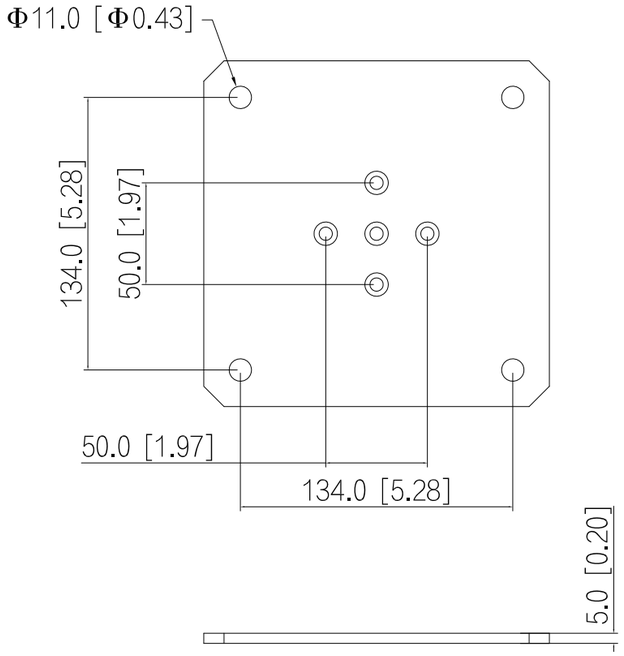
Φ11.0 [Φ0.43]
134.0 [5.28]
50.0 [1.97]
50.0 [1.97]
134.0 [5.28]
5.0 [0.20]

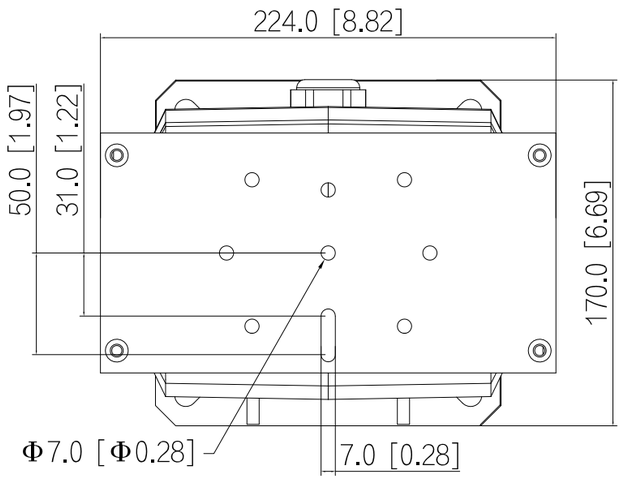
224.0 [8.82]
50.0 [1.97]
31.0 [1.22]
170.0 [6.69]
Φ7.0 [Φ0.28]
7.0 [0.28]

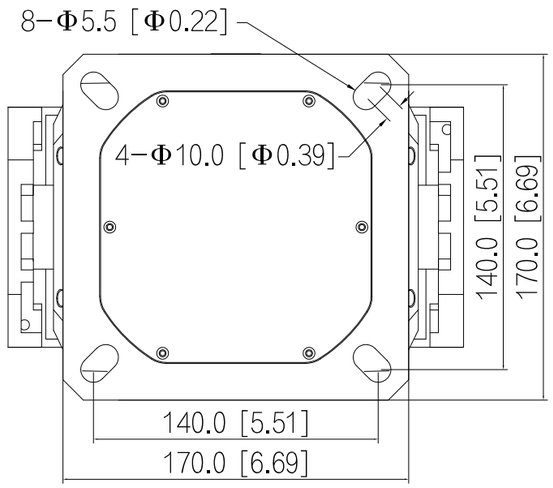
8−Φ5.5 [Φ0.22]
4−Φ10.0 [Φ0.39]
140.0 [5.51]
170.0 [6.69]
140.0 [5.51]
170.0 [6.69]