mm [inch]

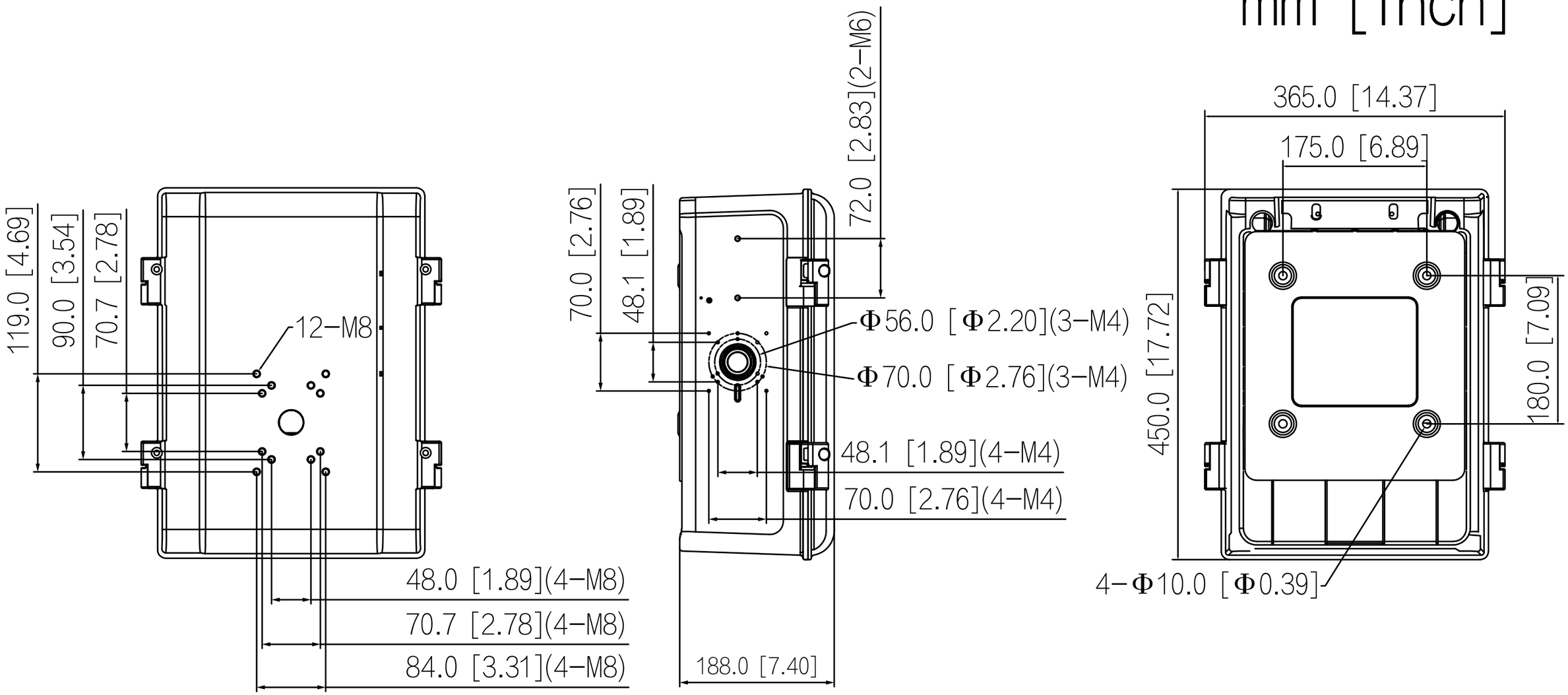
119.0 [4.69]
90.0 [3.54]
70.7 [2.78]
12−M8
48.0 [1.89](4−M8)
70.7 [2.78](4−M8)
84.0 [3.31](4−M8)
70.0 [2.76]
48.1 [1.89]
72.0 [2.83](2−M6)
Φ56.0 [Φ2.20](3−M4)
Φ70.0 [Φ2.76](3−M4)
48.1 [1.89](4−M4)
70.0 [2.76](4−M4)
188.0 [7.40]
365.0 [14.37]
175.0 [6.89]
450.0 [17.72]
180.0 [7.09]
4−Φ10.0 [Φ0.39]

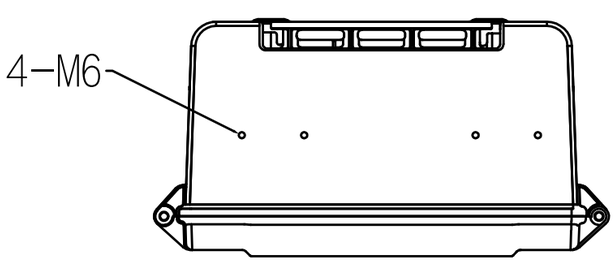
4−M6