mm [inch]

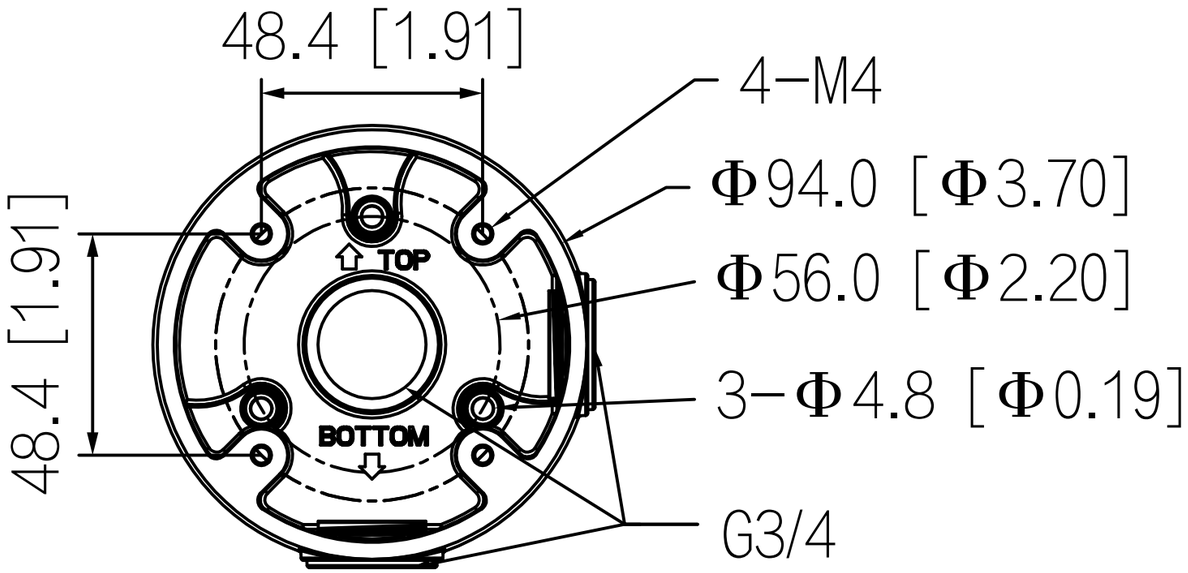
48.4 [1.91]
4−M4
Φ94.0 [Φ3.70]
Φ56.0 [Φ2.20]
3−Φ4.8 [Φ0.19]
G3/4
48.4 [1.91]
TOP
BOTTOM

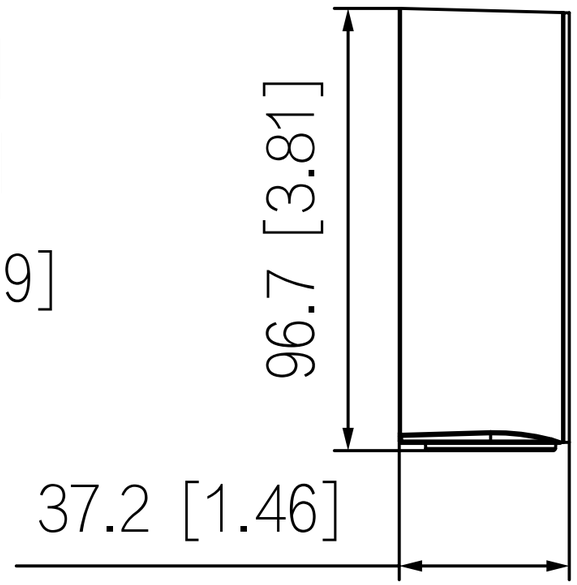
96.7 [3.81]
37.2 [1.46]

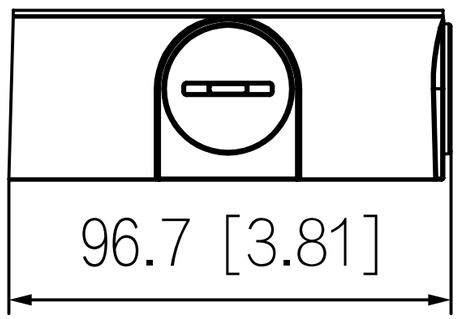
96.7 [3.81]