mm [inch]

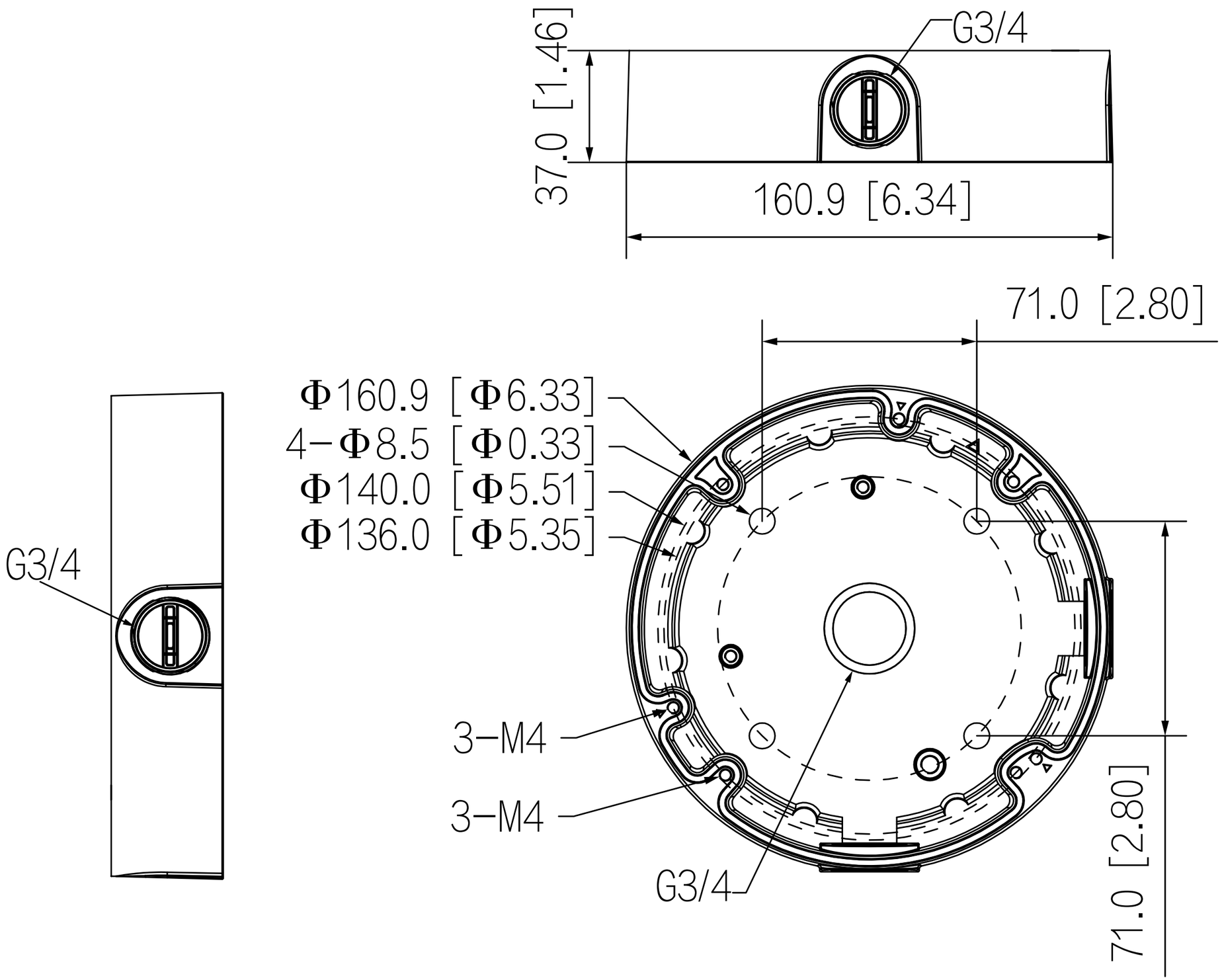
G3/4
37.0 [1.46]
160.9 [6.34]
71.0 [2.80]
Φ160.9 [Φ6.33]
4−Φ8.5 [Φ0.33]
Φ140.0 [Φ5.51]
Φ136.0 [Φ5.35]
G3/4
3−M4
3−M4
G3/4
71.0 [2.80]