mm [inch]

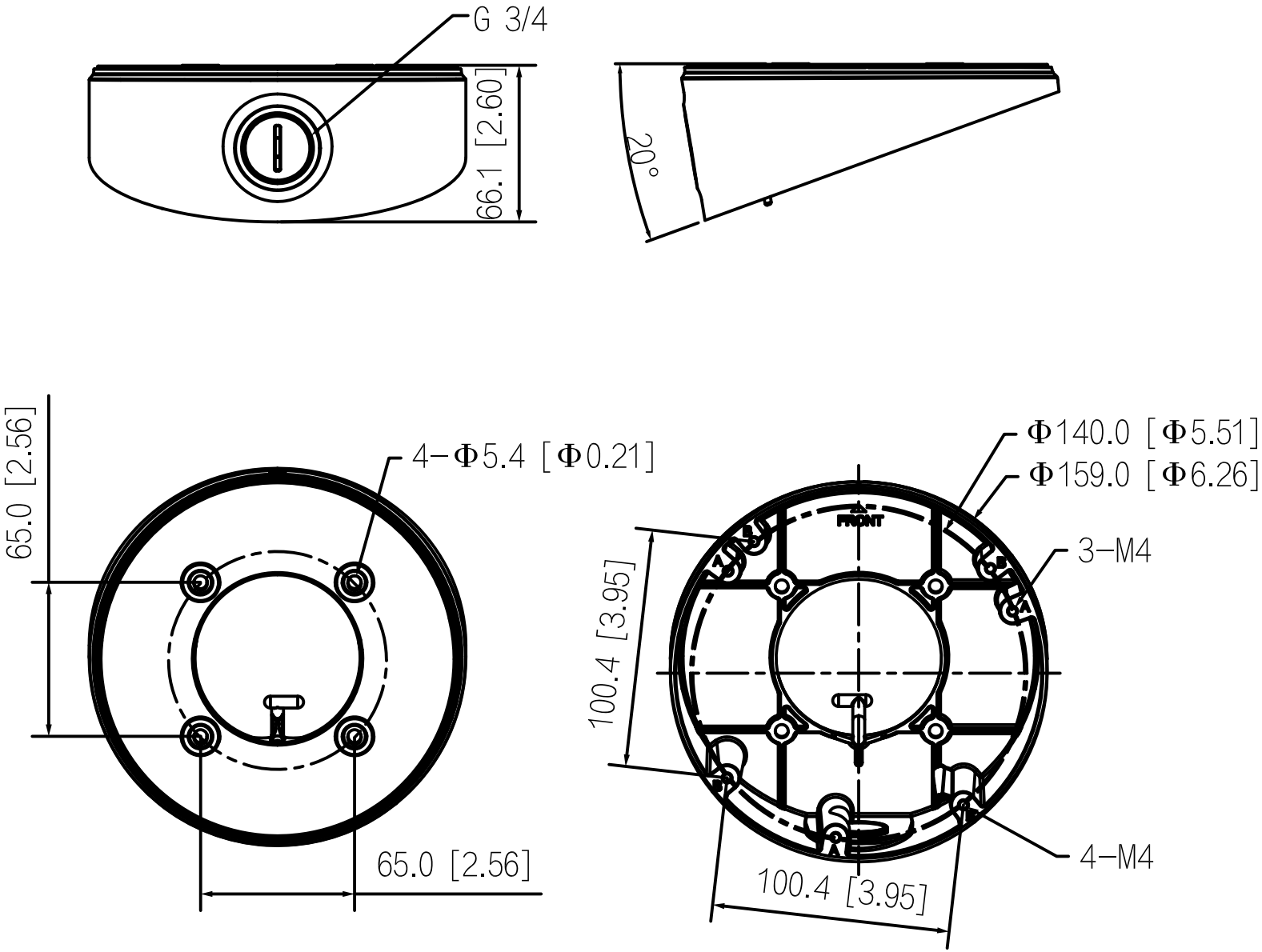
G 3/4
66.1 [2.60]
20°
65.0 [2.56]
4−Φ5.4 [Φ0.21]
65.0 [2.56]
Φ140.0 [Φ5.51]
Φ159.0 [Φ6.26]
FRONT
3−M4
100.4 [3.95]
4−M4
100.4 [3.95]