mm [inch]

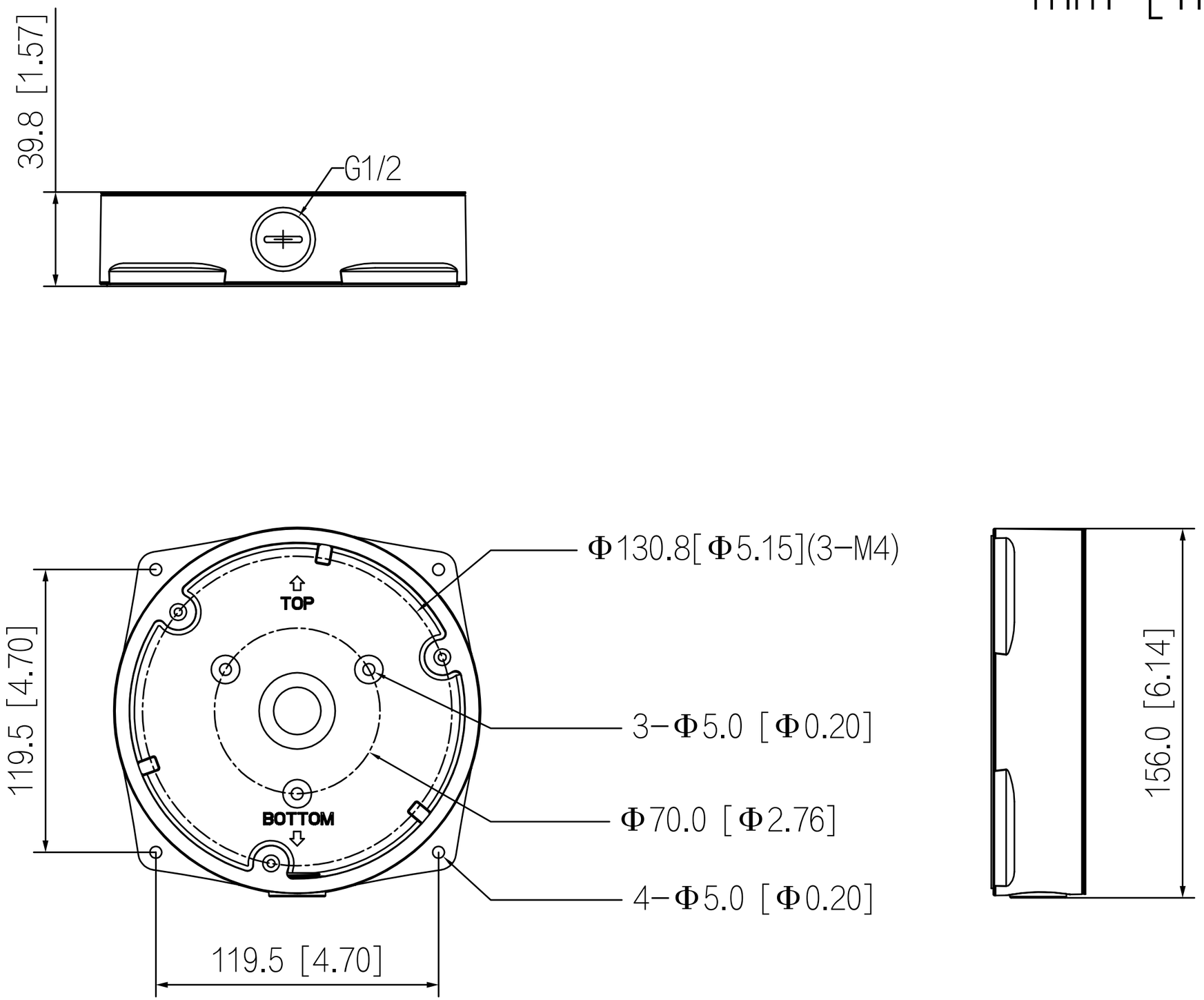
39.8 [1.57]
G1/2
TOP
BOTTOM
Φ130.8[Φ5.15](3−M4)
3−Φ5.0 [Φ0.20]
Φ70.0 [Φ2.76]
4−Φ5.0 [Φ0.20]
119.5 [4.70]
119.5 [4.70]
156.0 [6.14]