mm [inch]

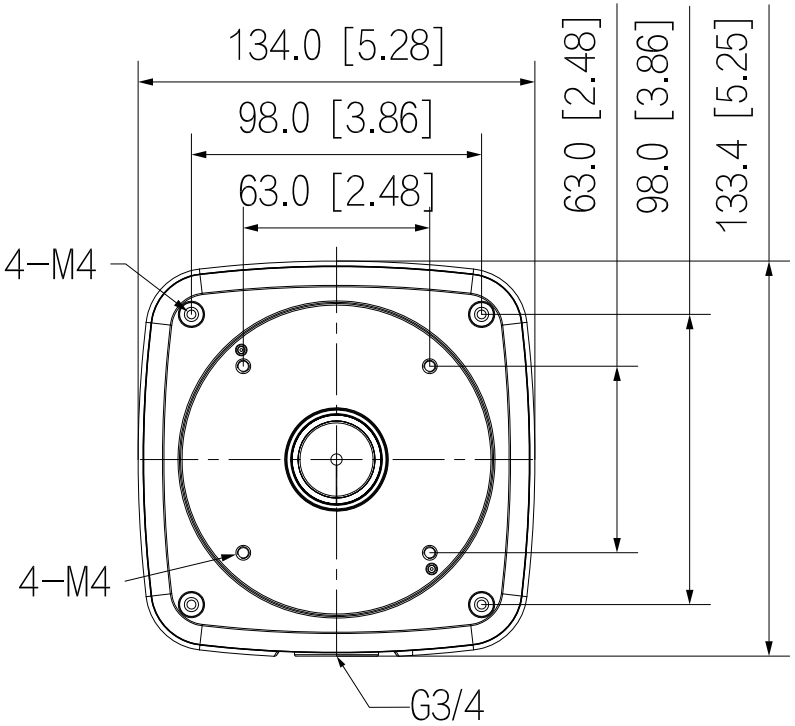
134.0 [5.28]
98.0 [3.86]
63.0 [2.48]
63.0 [2.48]
98.0 [3.86]
133.4 [5.25]
4−M4
4−M4
G3/4

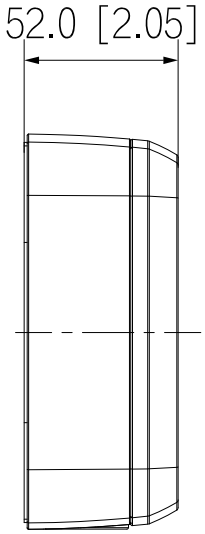
52.0 [2.05]

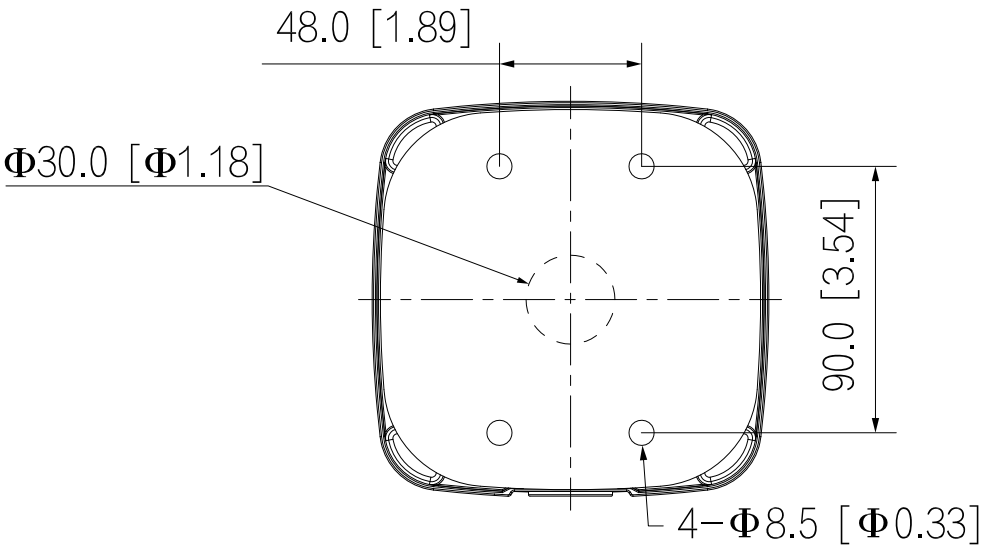
48.0 [1.89]
Φ30.0 [Φ1.18]
90.0 [3.54]
4−Φ8.5 [Φ0.33]