mm [inch]

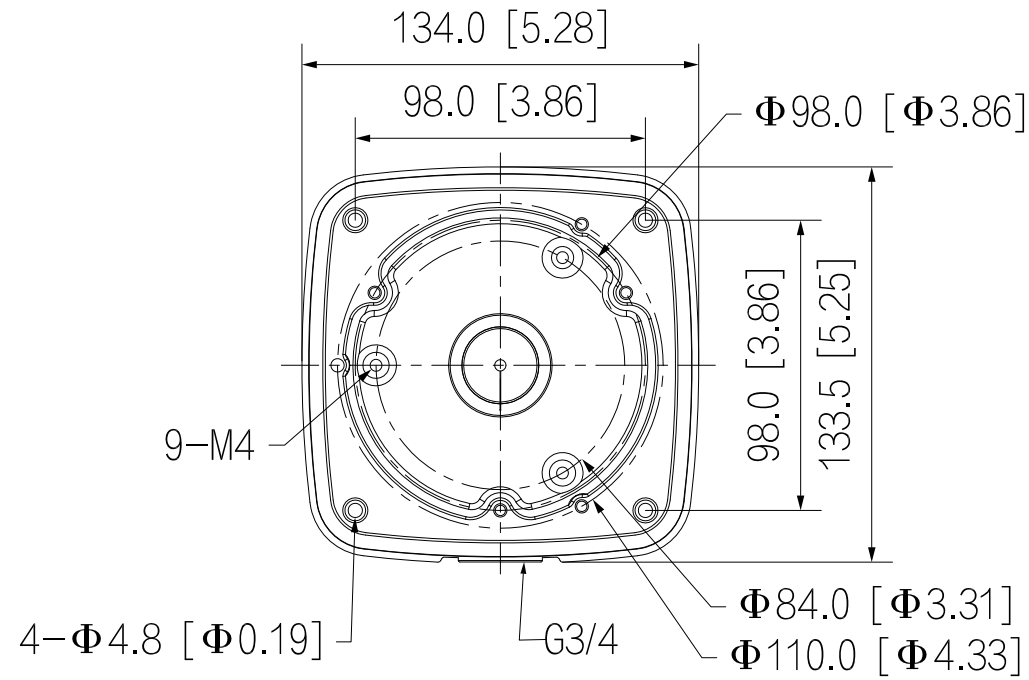
134.0 [5.28]
98.0 [3.86]
Φ98.0 [Φ3.86]
98.0 [3.86]
133.5 [5.25]
9−M4
4−Φ4.8 [Φ0.19]
G3/4
Φ84.0 [Φ3.31]
Φ110.0 [Φ4.33]

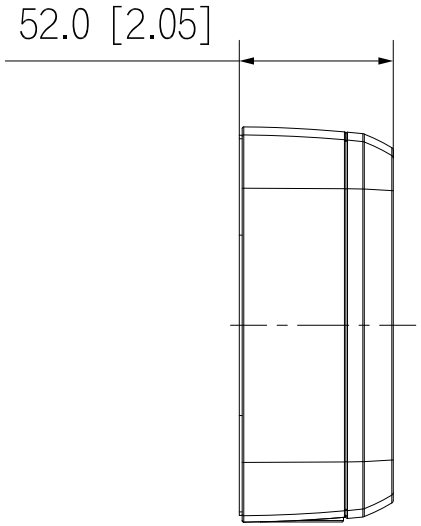
52.0 [2.05]

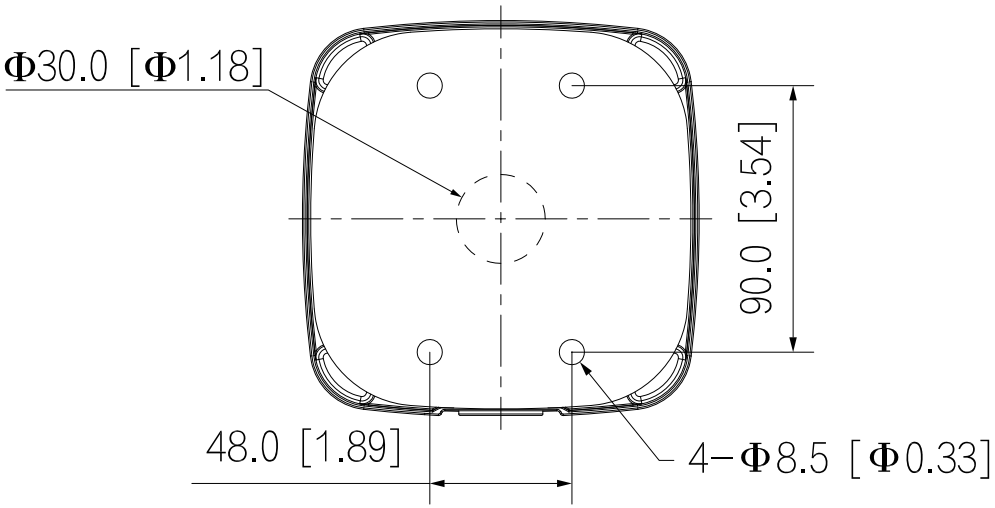
Φ30.0 [Φ1.18]
90.0 [3.54]
48.0 [1.89]
4−Φ8.5 [Φ0.33]