mm [inch]

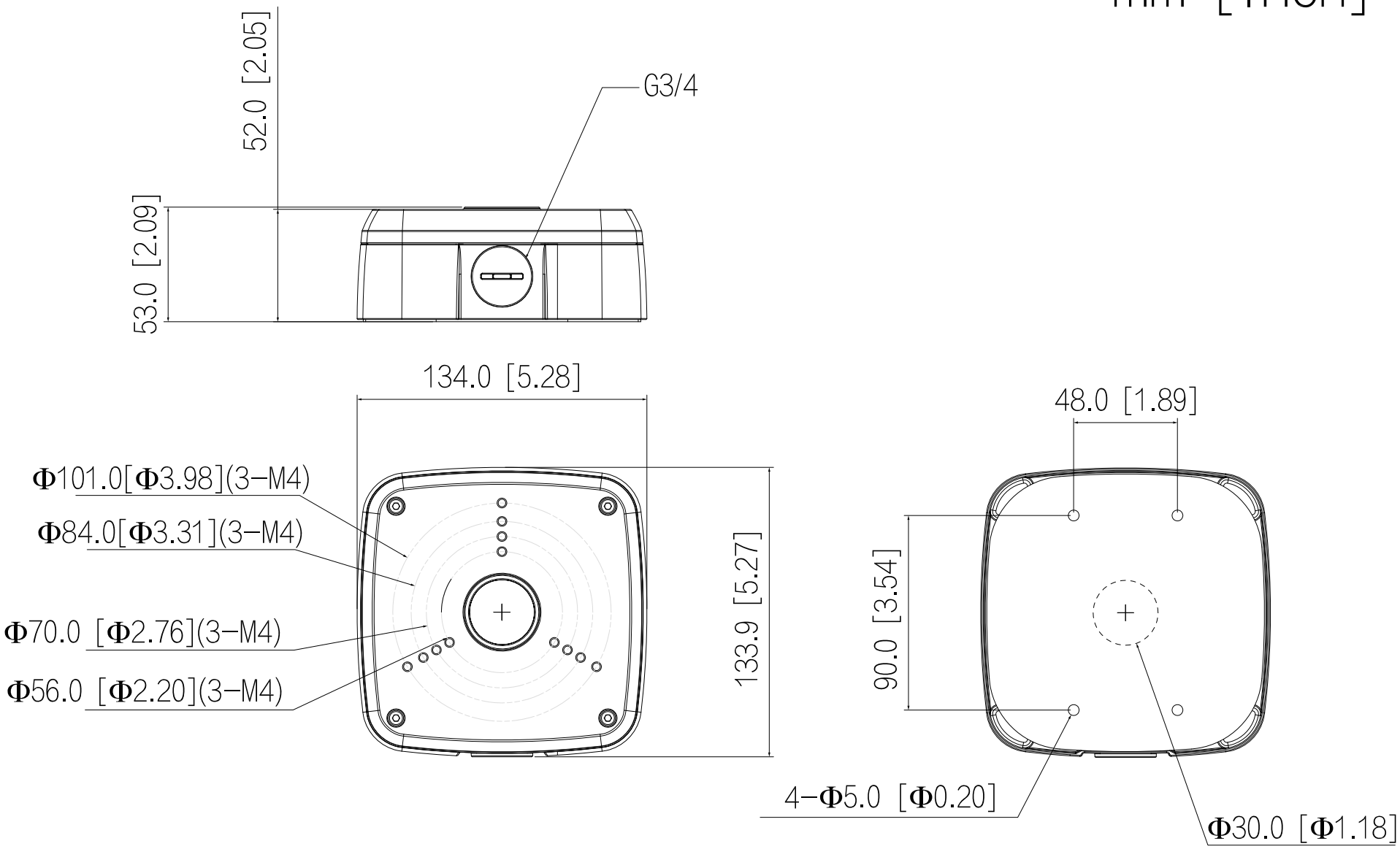
52.0 [2.05]
G3/4
53.0 [2.09]
134.0 [5.28]
Φ101.0[Φ3.98](3−M4)
Φ84.0[Φ3.31](3−M4)
Φ70.0 [Φ2.76](3−M4)
Φ56.0 [Φ2.20](3−M4)
133.9 [5.27]
48.0 [1.89]
90.0 [3.54]
4−Φ5.0 [Φ0.20]
Φ30.0 [Φ1.18]