mm [inch]

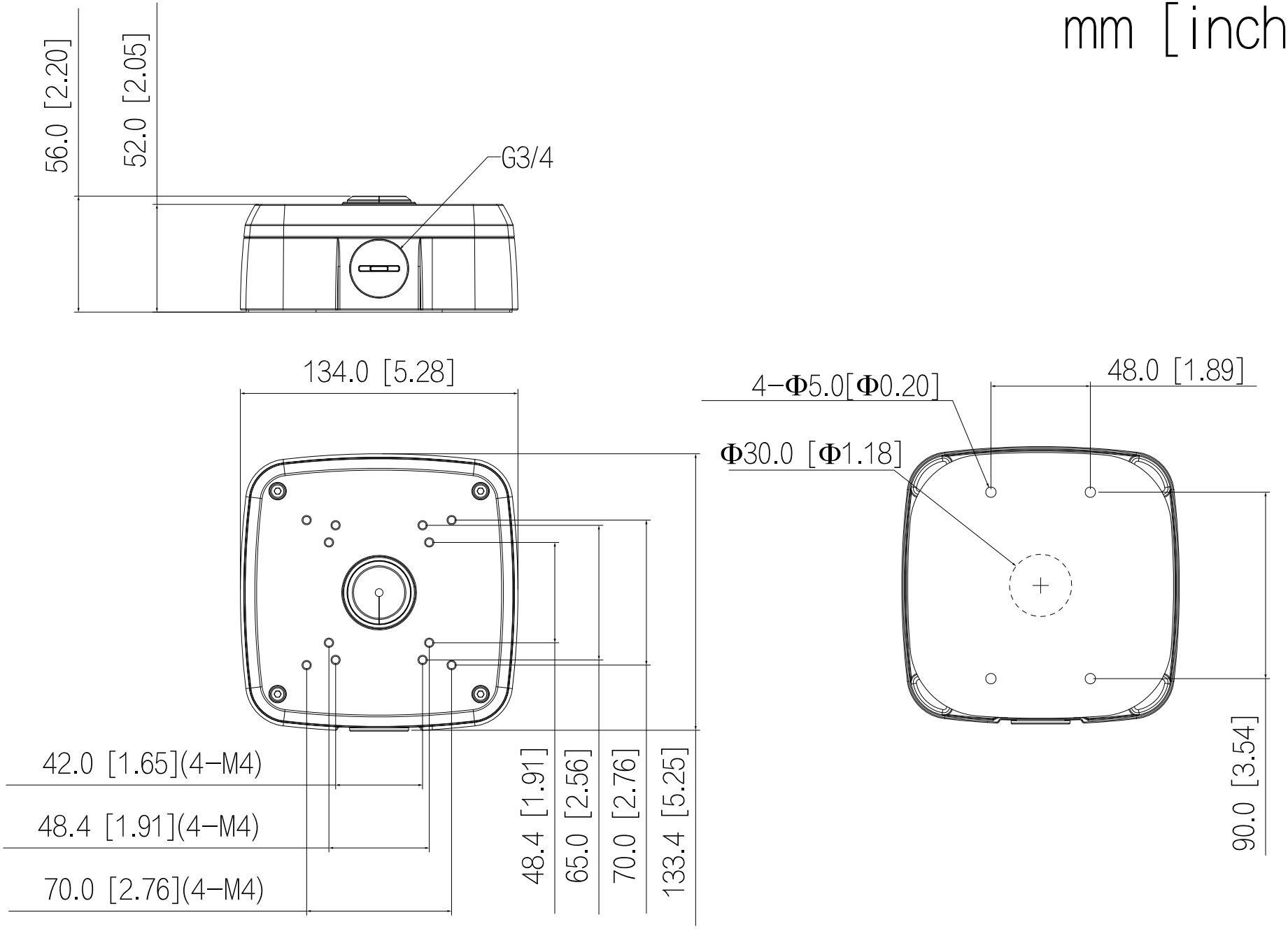
56.0 [2.20]
52.0 [2.05]
G3/4
134.0 [5.28]
4−Φ5.0[Φ0.20]
48.0 [1.89]
Φ30.0 [Φ1.18]
42.0 [1.65](4−M4)
48.4 [1.91](4−M4)
70.0 [2.76](4−M4)
48.4 [1.91]
65.0 [2.56]
70.0 [2.76]
133.4 [5.25]
90.0 [3.54]