mm [inch]

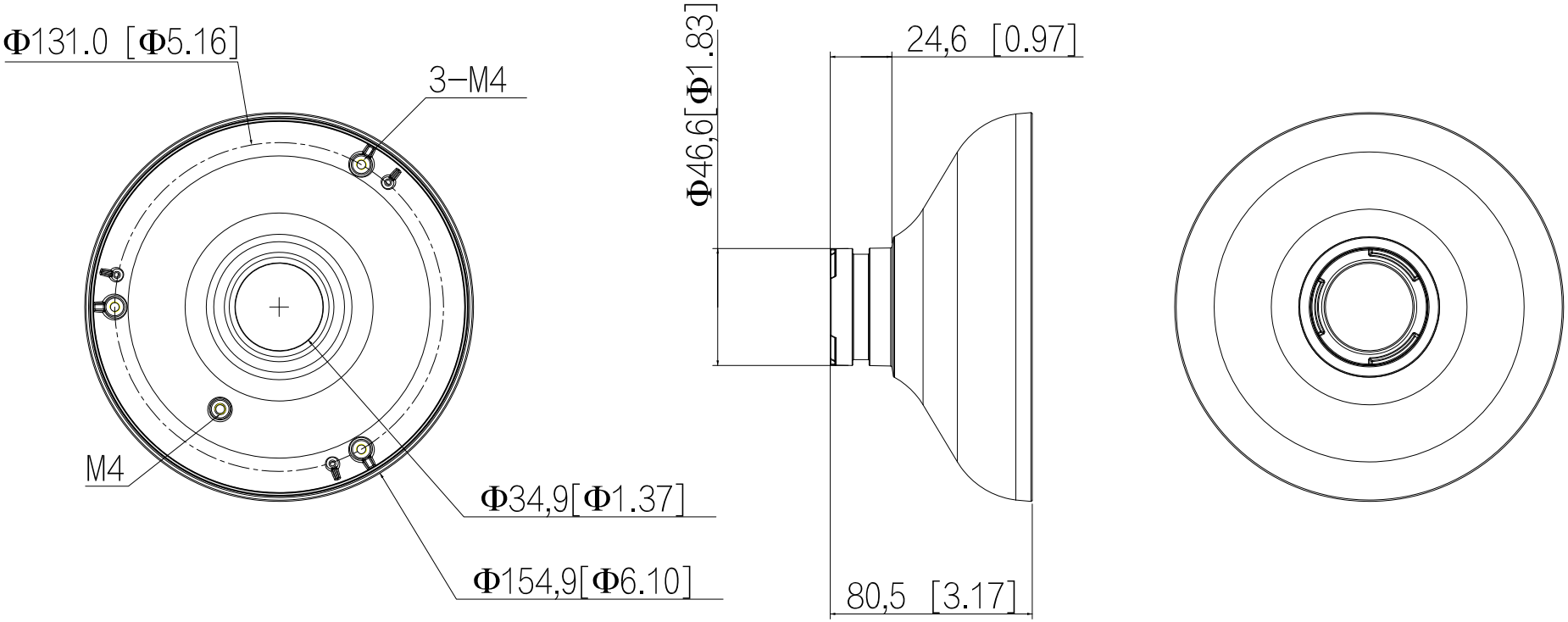
Φ131.0 [Φ5.16]
3-M4
M4
Φ34,9[Φ1.37]
Φ154,9[Φ6.10]
Φ46,6[Φ1.83]
24,6 [0.97]
80,5 [3.17]