mm [inch]

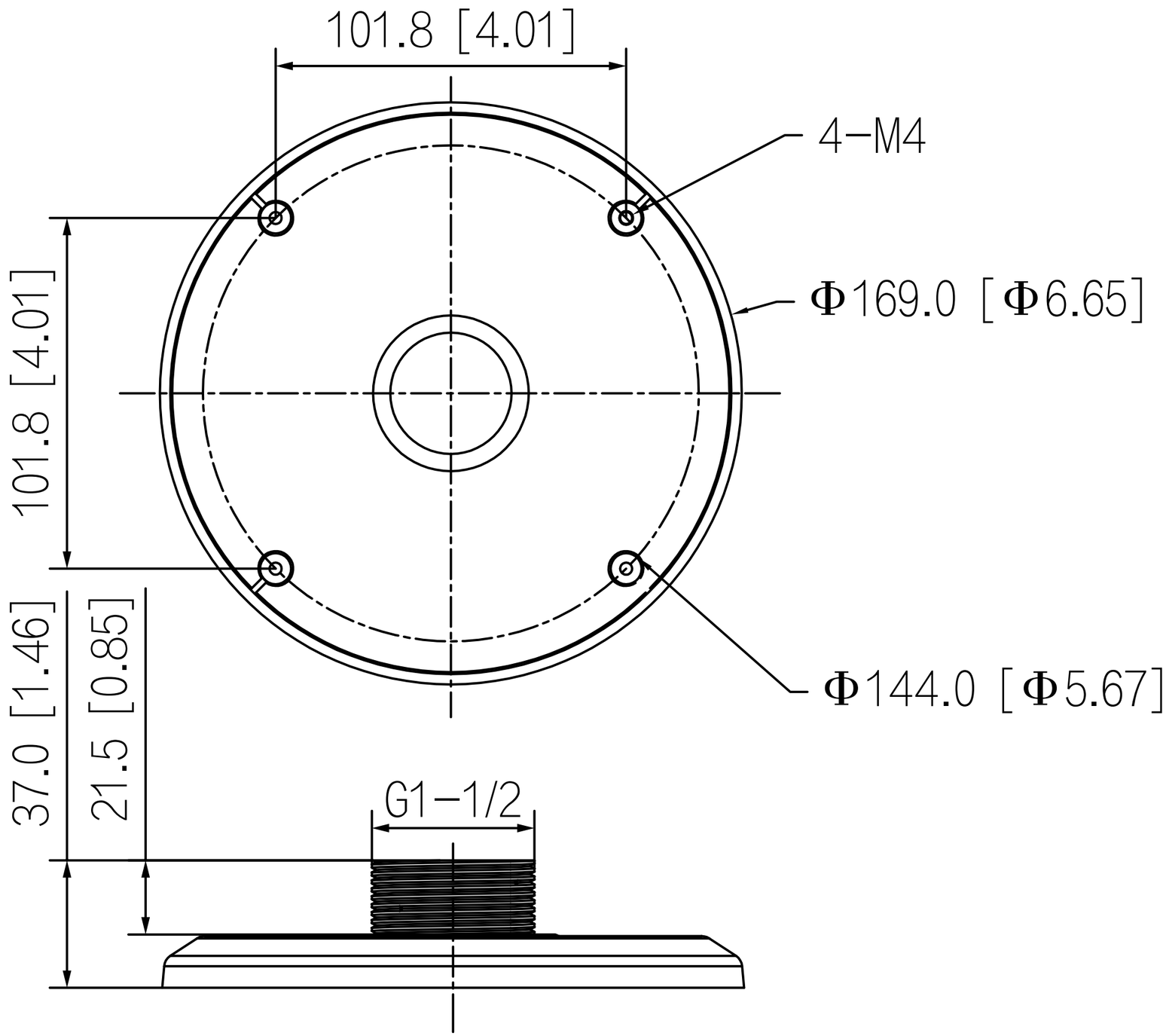
101.8 [4.01]
4−M4
Φ169.0 [Φ6.65]
101.8 [4.01]
37.0 [1.46]
21.5 [0.85]
Φ144.0 [Φ5.67]
G1−1/2