mm [inch]

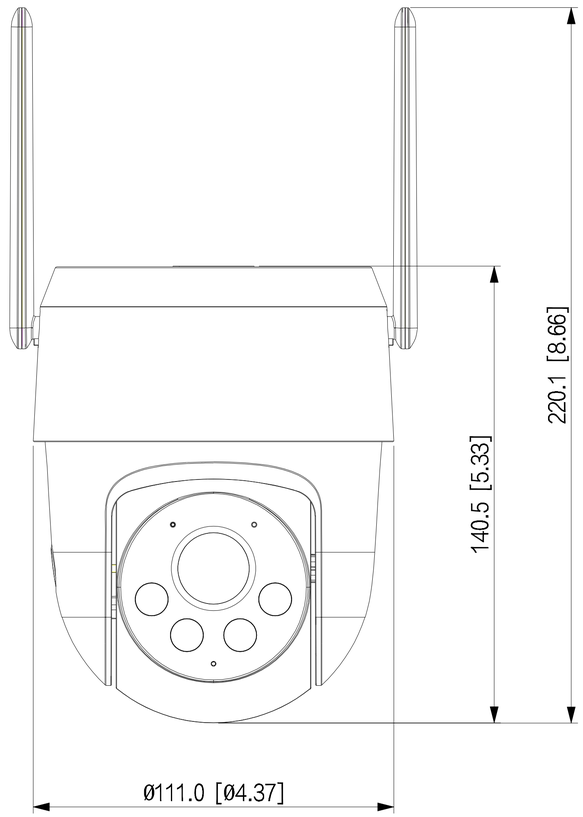
220.1 [8.66]
140.5 [5.33]
Ø111.0 [Ø4.37]

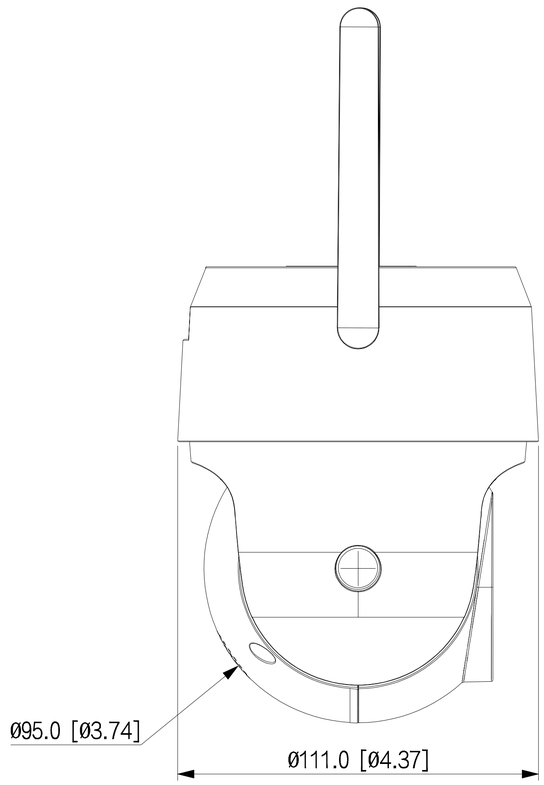
Ø95.0 [Ø3.74]
Ø111.0 [Ø4.37]

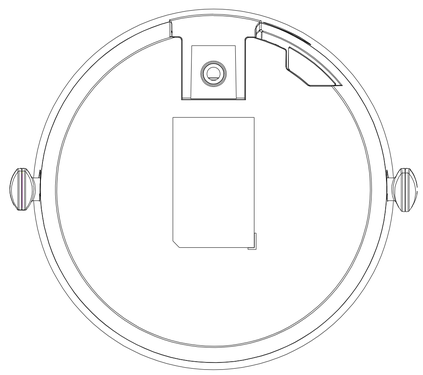

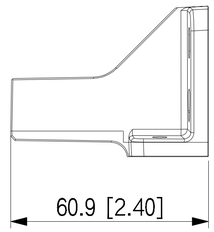
60.9 [2.40]

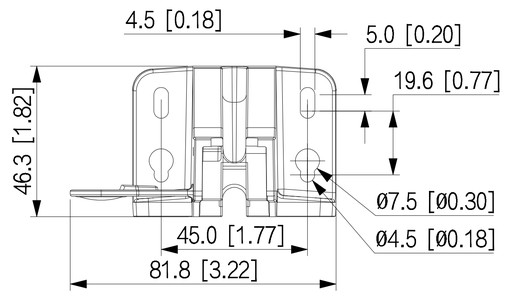
4.5 [0.18]
5.0 [0.20]
19.6 [0.77]
46.3 [1.82]
Ø7.5 [Ø0.30]
Ø4.5 [Ø0.18]
45.0 [1.77]
81.8 [3.22]

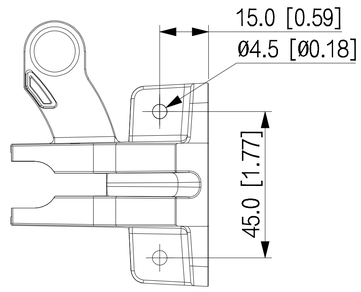
15.0 [0.59]
Ø4.5 [Ø0.18]
45.0 [1.77]