mm [inch]

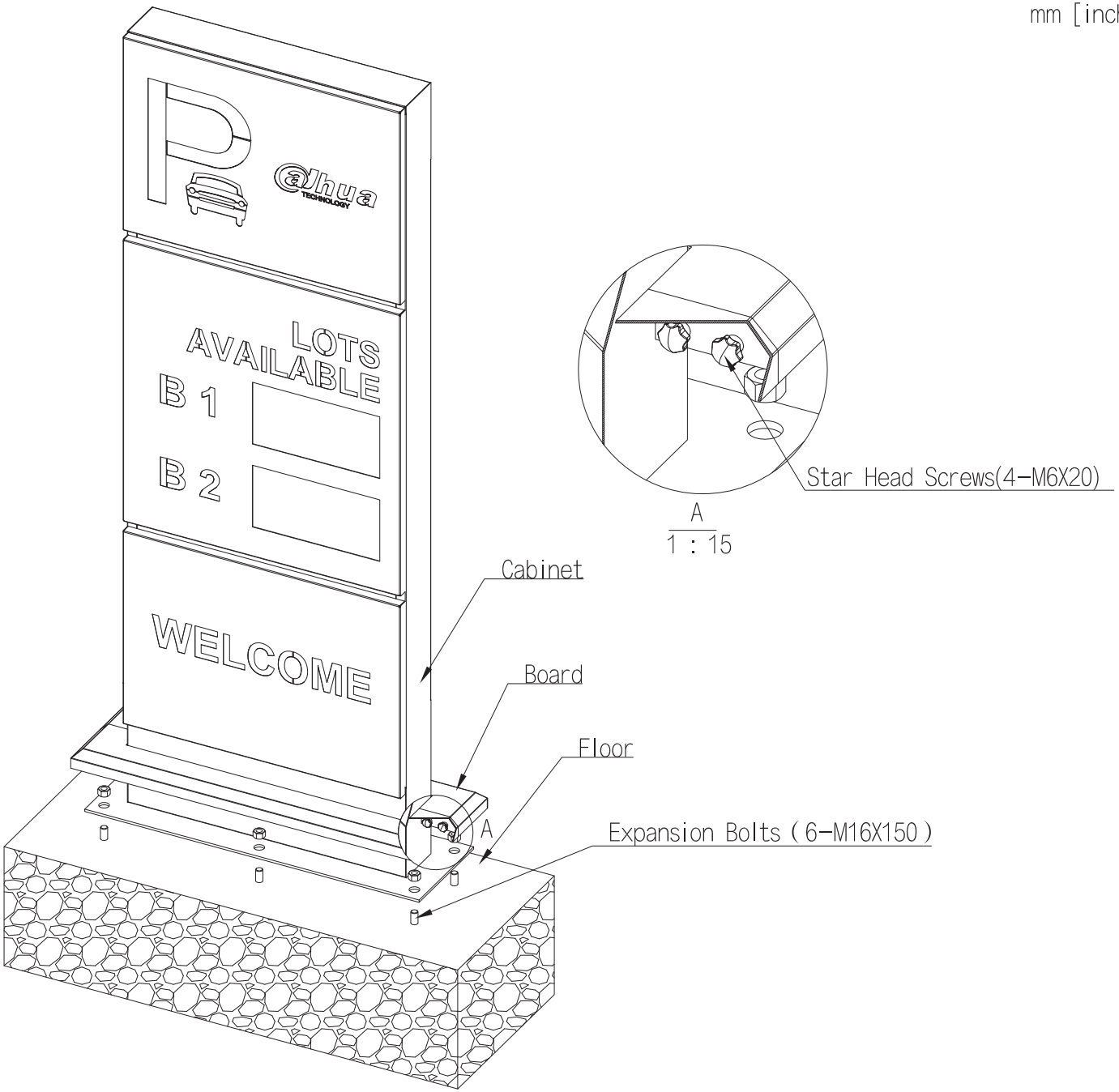
LOTS
AVAILABLE
B 1
B 2
WELCOME
Cabinet
Board
Floor
Expansion Bolts (6-M16X150)
A
Star Head Screws(4-M6X20)
A
1 : 15