mm [inch]

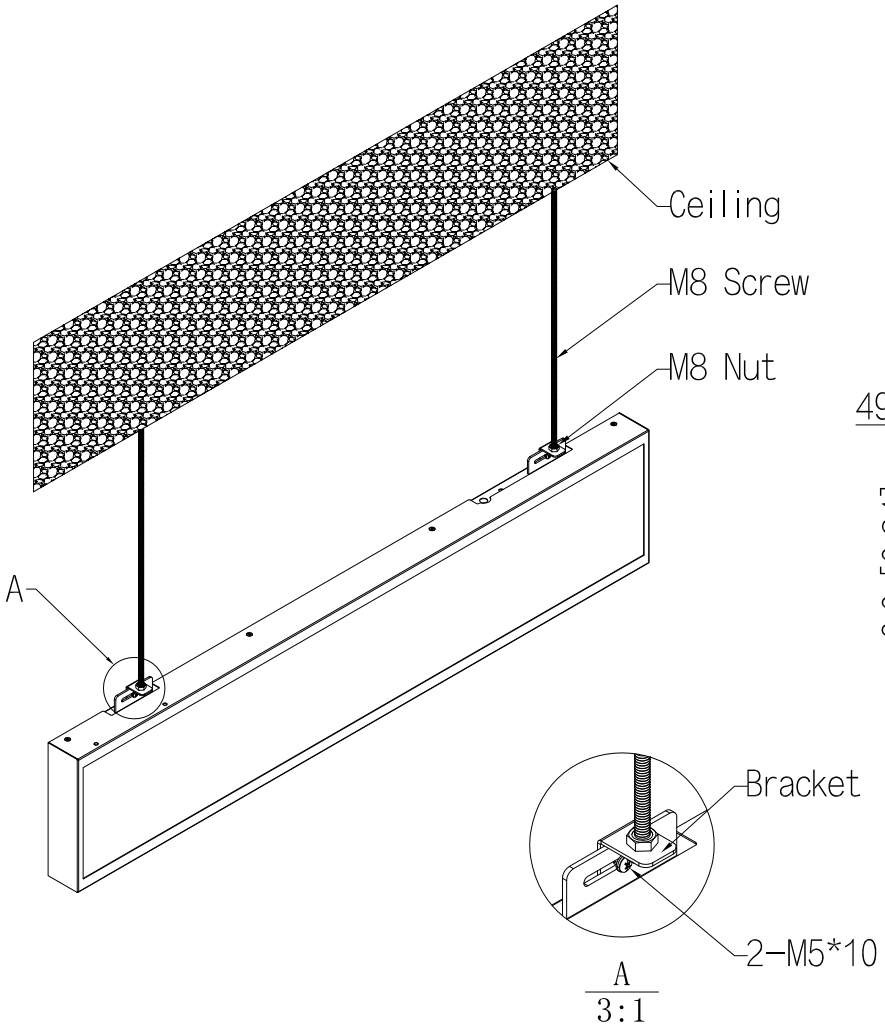
Ceiling
M8 Screw
M8 Nut
A
Bracket
2-M5*10
A
3:1

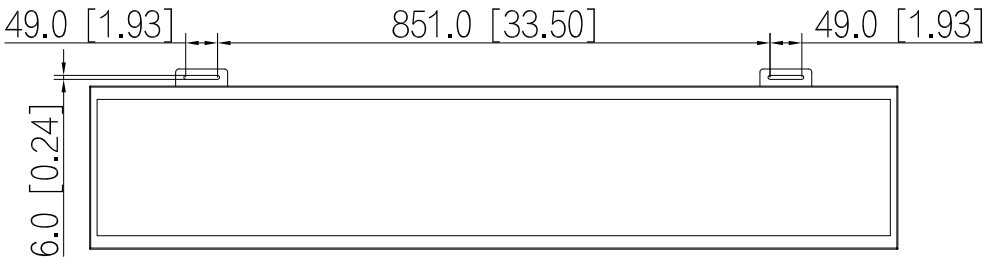
49.0 [1.93]
851.0 [33.50]
49.0 [1.93]
6.0 [0.24]