mm [inch]

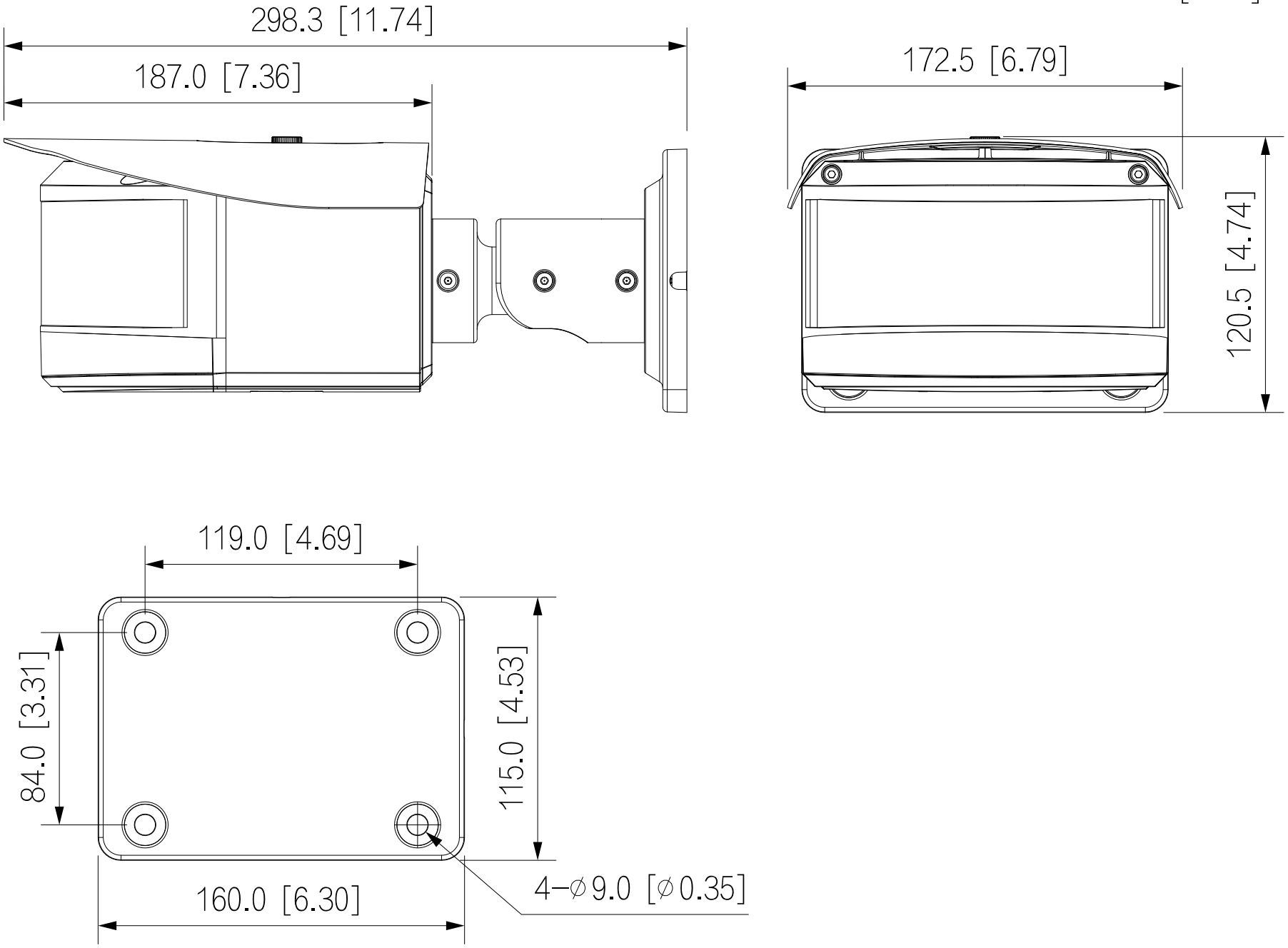
298.3 [11.74]
187.0 [7.36]
172.5 [6.79]
120.5 [4.74]
119.0 [4.69]
84.0 [3.31]
115.0 [4.53]
160.0 [6.30]
4−∅9.0 [∅0.35]