mm [inch]

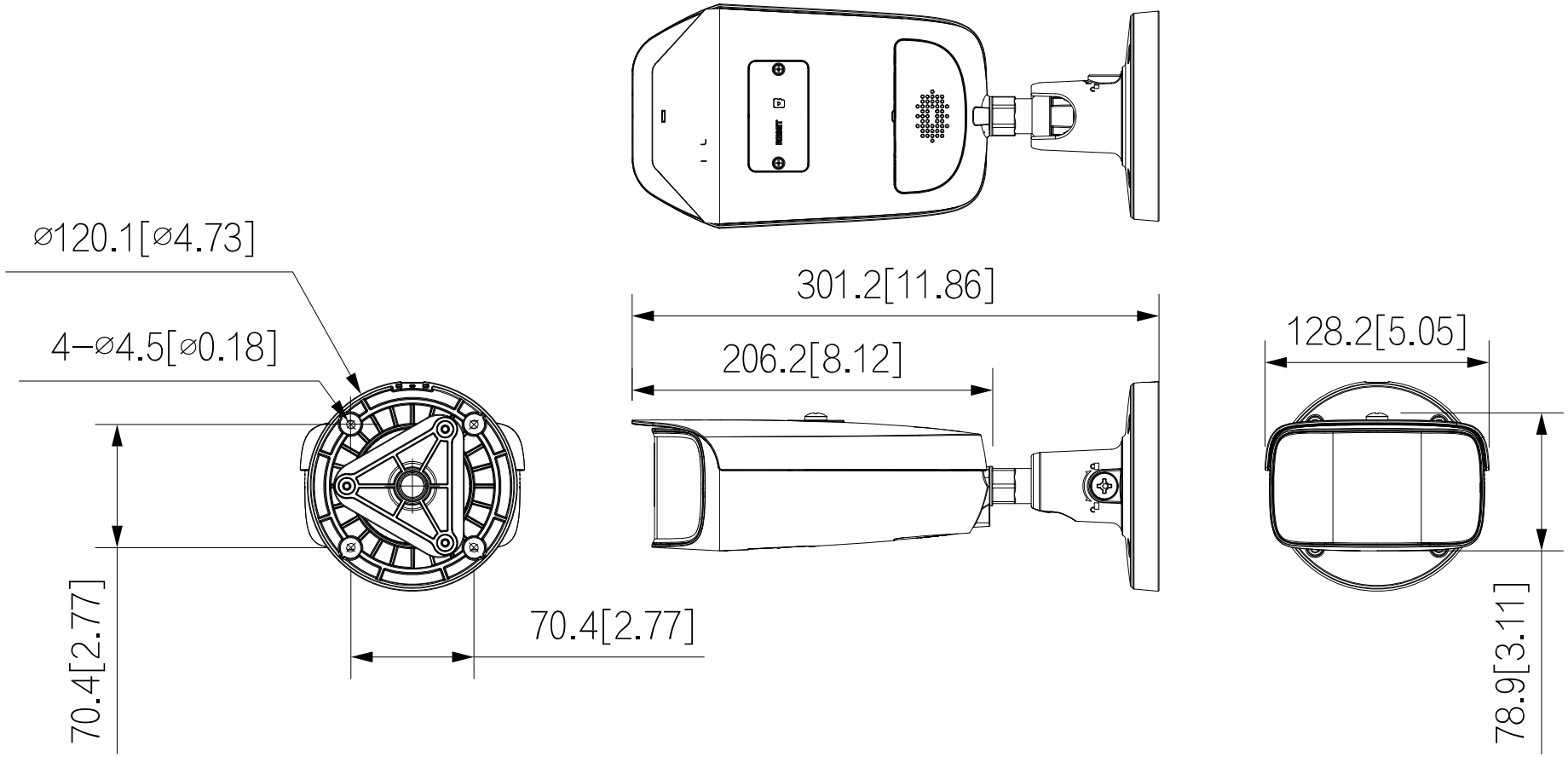
⌀120.1[⌀4.73]
4−⌀4.5[⌀0.18]
70.4[2.77]
70.4[2.77]
301.2[11.86]
206.2[8.12]
128.2[5.05]
78.9[3.11]