mm [inch]

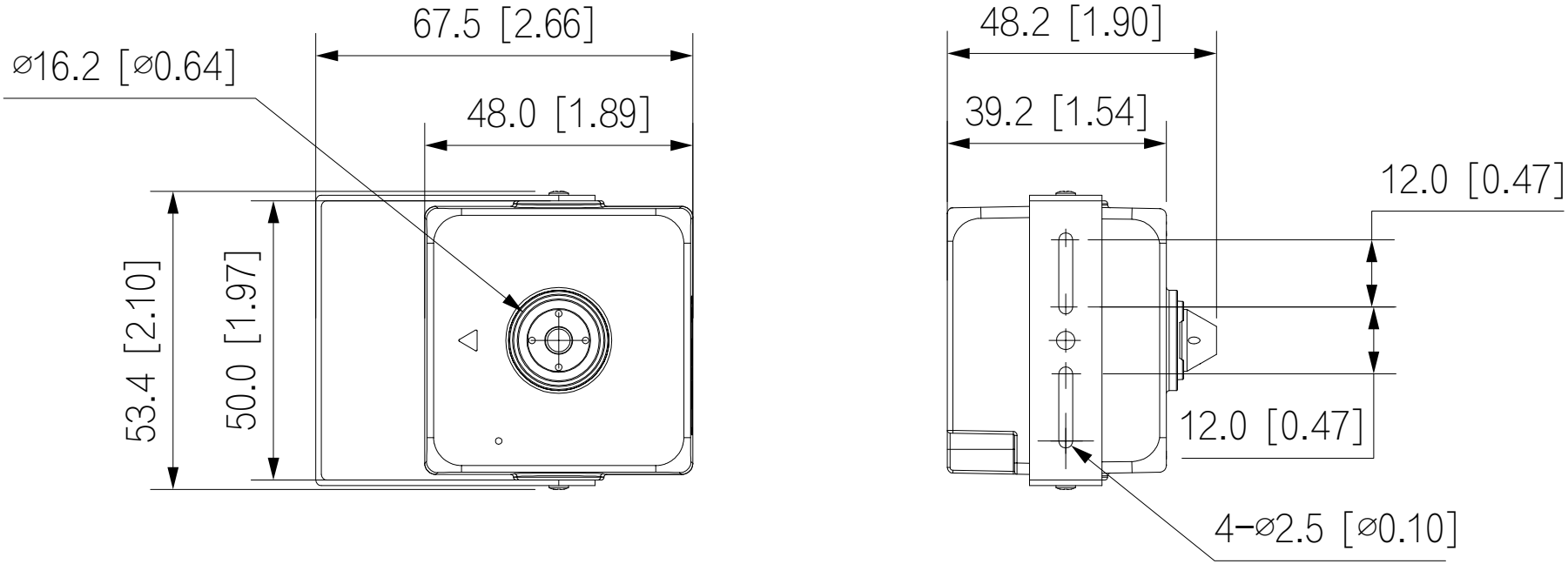
67.5 [2.66]
⌀16.2 [⌀0.64]
48.0 [1.89]
53.4 [2.10]
50.0 [1.97]
48.2 [1.90]
39.2 [1.54]
12.0 [0.47]
12.0 [0.47]
4−⌀2.5 [⌀0.10]