mm [inch]

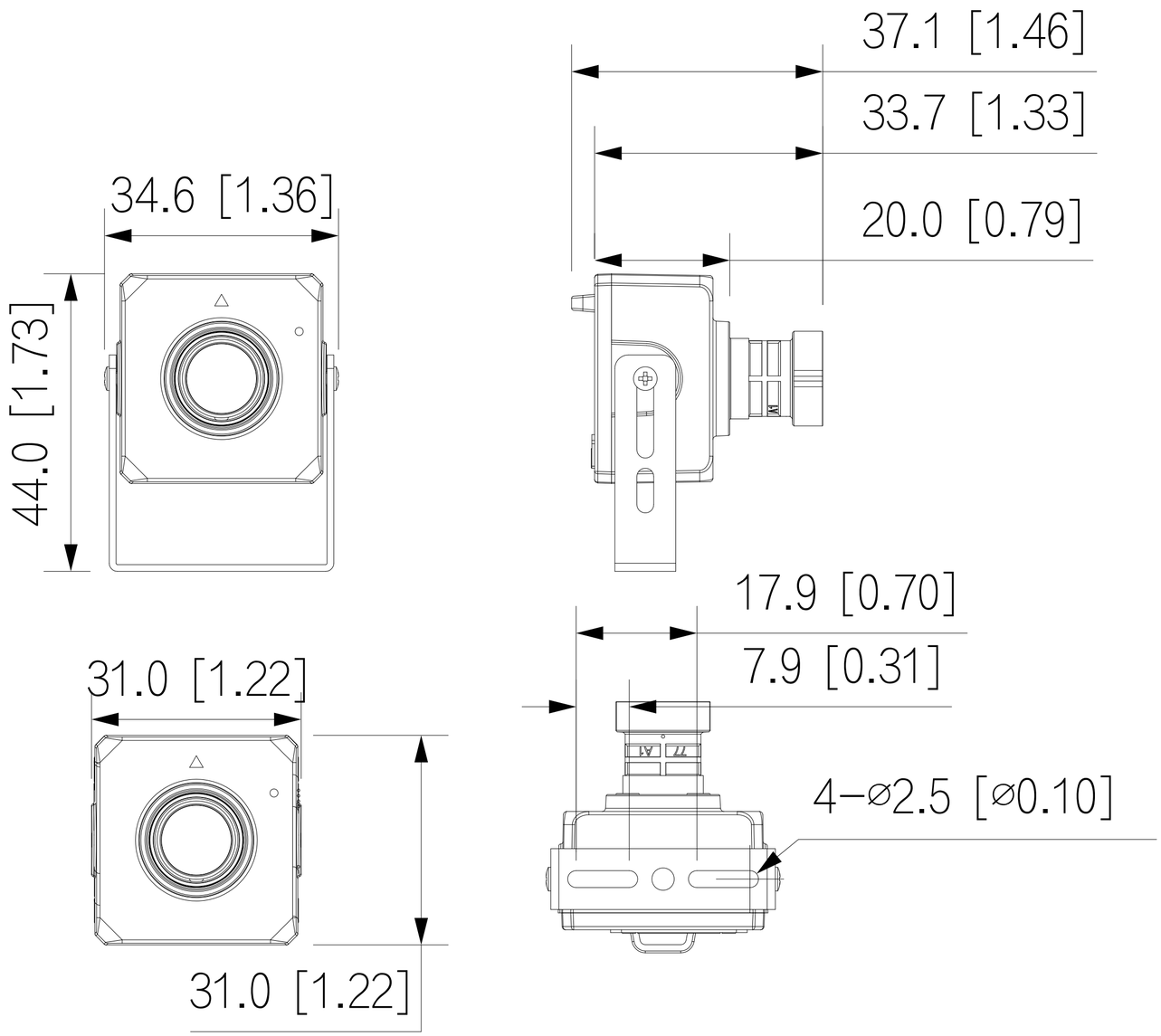
37.1 [1.46]
33.7 [1.33]
20.0 [0.79]
34.6 [1.36]
44.0 [1.73]
17.9 [0.70]
7.9 [0.31]
31.0 [1.22]
4−⌀2.5 [⌀0.10]
31.0 [1.22]