mm [inch]

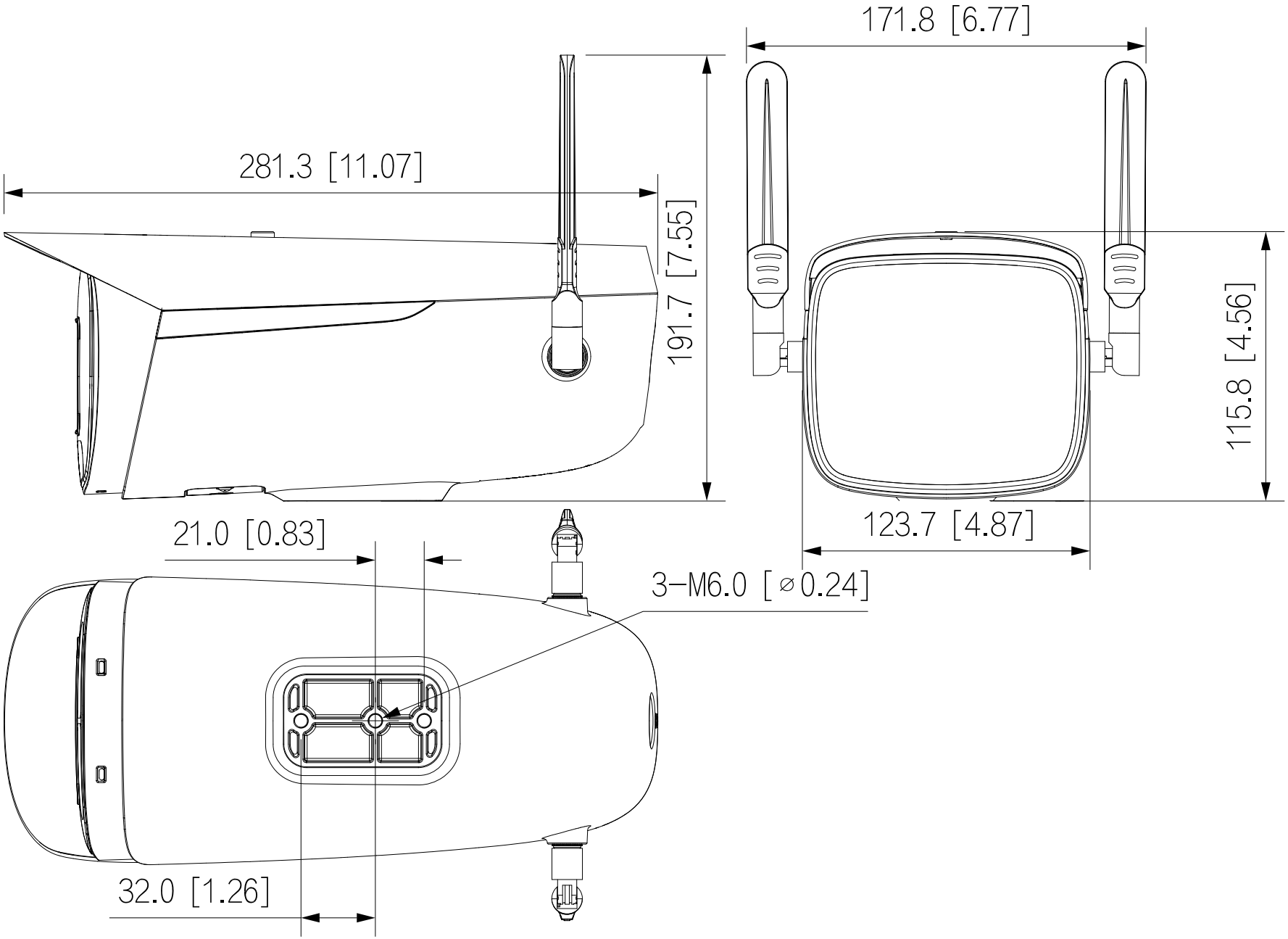
171.8 [6.77]
281.3 [11.07]
191.7 [7.55]
115.8 [4.56]
123.7 [4.87]
21.0 [0.83]
3-M6.0 [⌀0.24]
32.0 [1.26]