mm [inch]

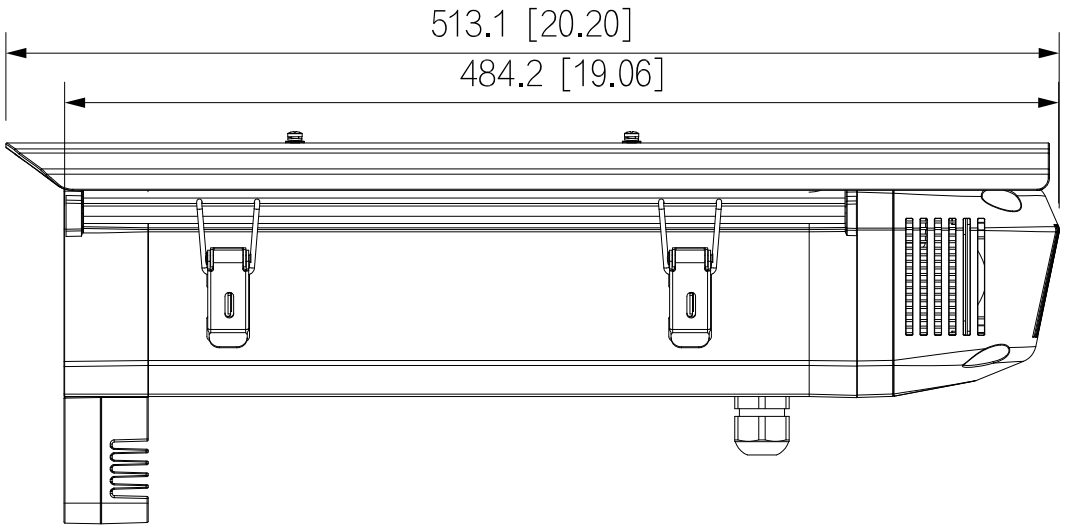
513.1 [20.20]
484.2 [19.06]

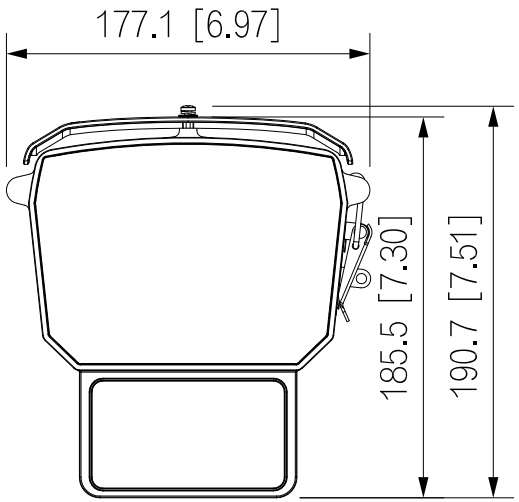
177.1 [6.97]
185.5 [7.30]
190.7 [7.51]

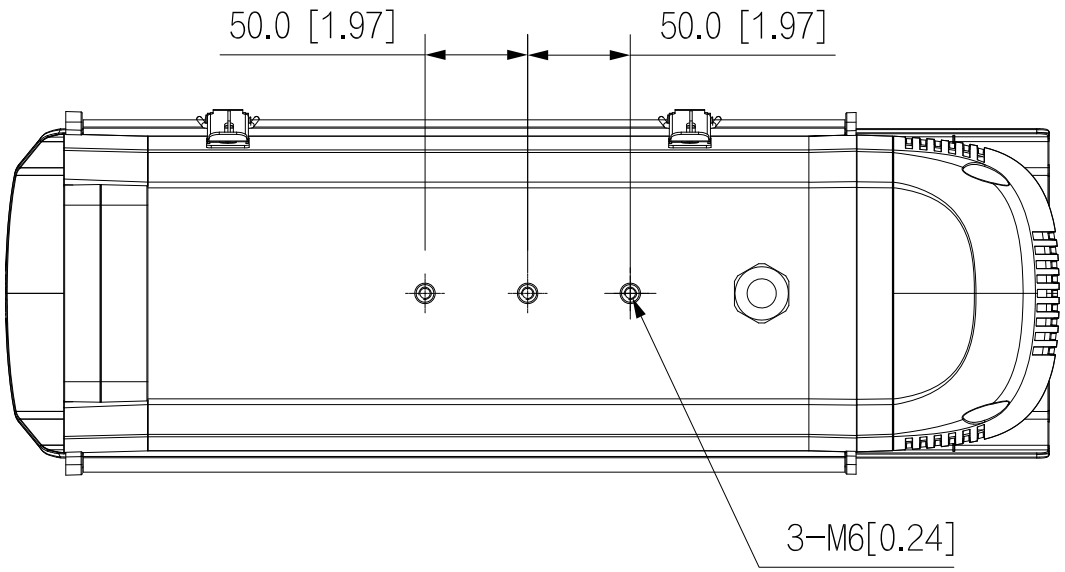
50.0 [1.97]
50.0 [1.97]
3-M6[0.24]