mm [inch]

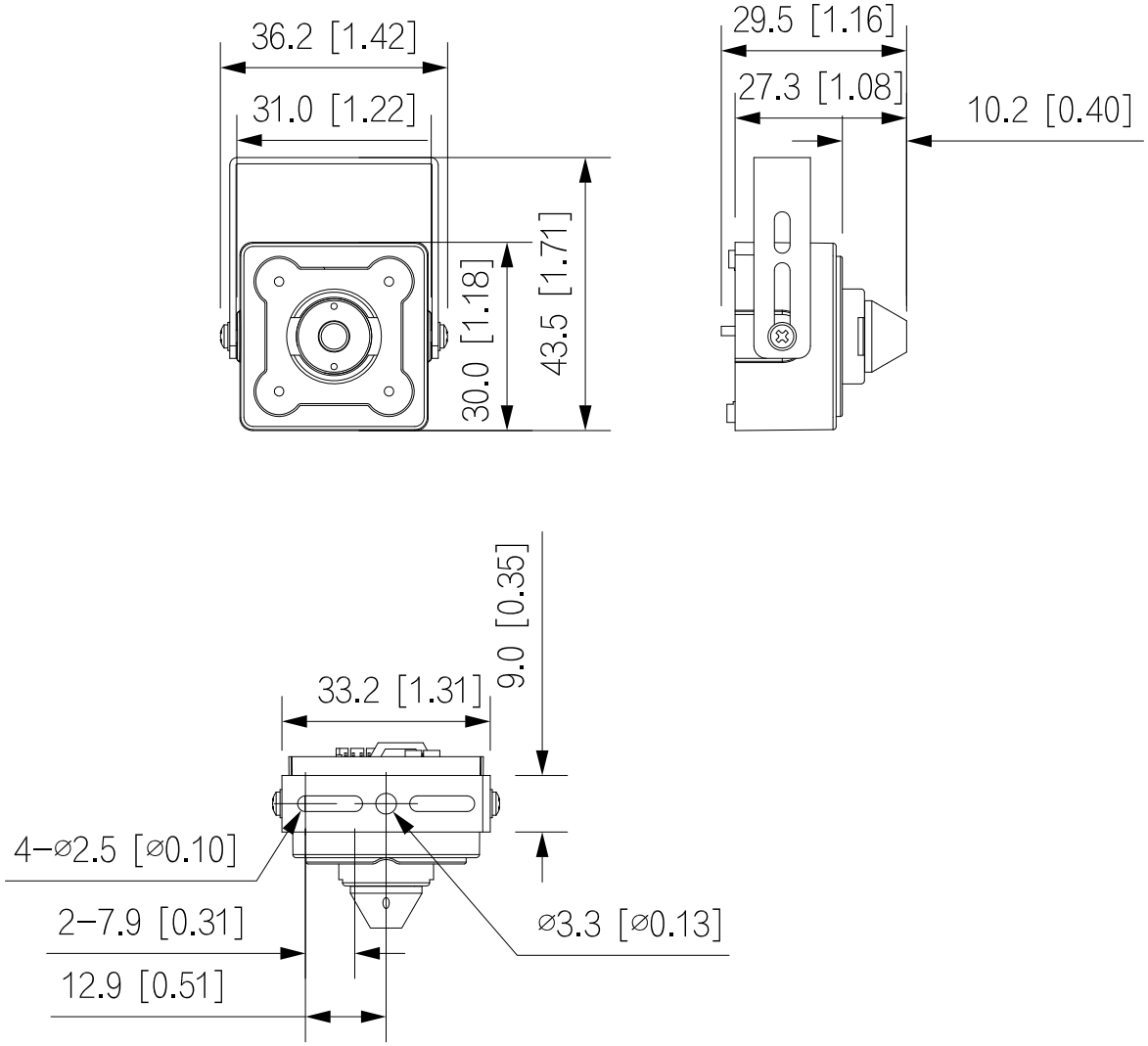
36.2 [1.42]
31.0 [1.22]
30.0 [1.18]
43.5 [1.71]
29.5 [1.16]
27.3 [1.08]
10.2 [0.40]
9.0 [0.35]
33.2 [1.31]
4−⌀2.5 [⌀0.10]
2−7.9 [0.31]
12.9 [0.51]
⌀3.3 [⌀0.13]